ORANGE COUNTY TRANSPORTATION AUTHORITY

RFP 7-2138

INSTALLATION OF VIDEO SURVEILLANCE SYSTEM

GARDEN GROVE BUS MAINTENANCE FACILITY

11790 CARDINAL CIRCLE, GARDEN GROVE, CA

LOCATION

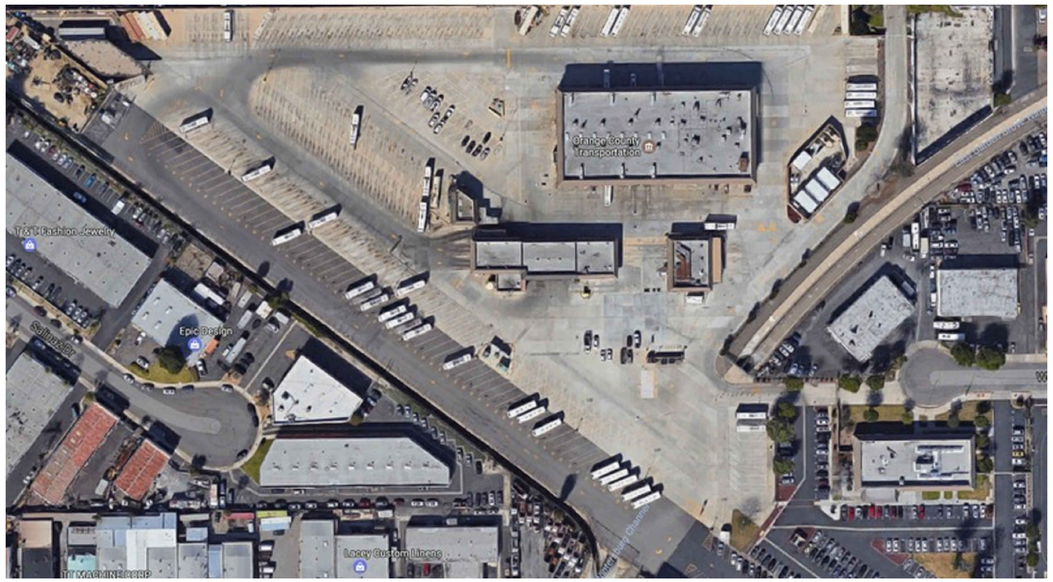

VICINITY MAP

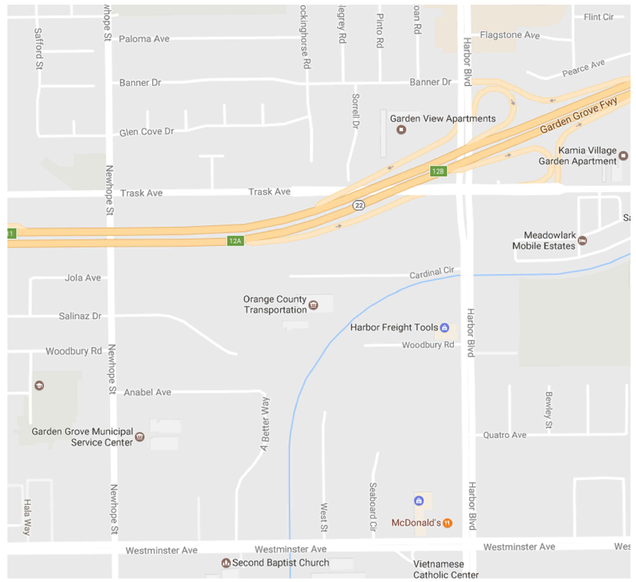

PROJECT

Orange County Transportation Authority

GARDEN GROVE BUS MAINTENANCE FACILITY

REDFIVE SECURITY

CONSULTANT

KEY PLAN

Issued Drawing Log

No.	Date	Item
1	11/14/16	60% DESIGN DRAWINGS
#	12/04/16	60% DD AFTER JOBWALK
#	12/30/16	85% CD DRAWINGS
#	01/27/17	100% CD DRAWINGS
#		
#		
#		

STAMP

DRAWING TITLE

GARDEN GROVE COVERPAGE

DRAWN BY REDS	PROJECT NO.
CHECKED REDS	SCALE N.T.S.
APPROVED REDS	CAD FILE

SC.000

SHEET INDEX

SHEET	DESCRIPTION
SC-000	COVERPAGE
SC.001	GENERAL NOTES, SYMBOLS, SCHEDULES & ABBREVIATIONS
SC.002	SITE PLAN NORTH BUILDING - EXTERIOR
SC.003	SITE PLAN SOUTH BUILDING - EXTERIOR
SC.101	MAINTENANCE BUILDING FIRST FLOOR PLAN - INTERIOR
SC.102	MAINTENANCE BUILDING SECOND FLOOR PLAN - INTERIOR
SC.103	OPERATIONS BUILDING - INTERIOR
SC-201	WEST SITE DEMO PLAN
SC-202	EAST SITE DEMO PLAN
SC-203	MAINTENANCE BUILDING FIRST FLOOR DEMO PLAN
SC-204	MAINTENANCE BUILDING SECOND FLOOR DEMO PLAN
SC-205	OPERATIONS BUILDING DEMO PLAN
SC-206	FUELING AND BRAKE CHECK DEMO PLAN
SC.207	ANNEX 1ST & 2ND FLOOR
SC.501	DETAIL PLAN DOME CAMERA MOUNTING METHODS
SC.502	DETAIL PLAN LICENSE PLATE CAMERA MOUNTING METHODS
SC.503	DETAIL PLAN PTZ CAMERA MOUNTING METHODS
SC.504	DETAIL PLAN HOUSING AND BULLET CAMERA MOUNTING METHODS
SC.505	DT-05 DETAIL PLAN EQUIPMENT RACK
SC.506	DETAIL PLAN EQUIPMENT ENCLOSURE
SC.507	PLAN REMOTE BUILDING EQUIPMENT ENCLOSURE
SC.601	LINE DIAGRAM

GENERAL NOTES

CONDUIT AND INFRASTRUCTURE NOTES

1. ALL DETAIL DRAWINGS AND DESIGN ELEMENTS ON THESE SHEETS ARE A BASIS OF DESIGN ONLY AND ARE A GENERAL REPRESENTATION OF THE QUALITY AND TYPE OF EQUIPMENT, INSTALLATION, AND WORKMANSHIP OF THE FINAL PRODUCT REQUIRED FOR THIS PROJECT. INSTALLATION CONTRACTOR IS ULTIMATELY RESPONSIBLE TO PROVIDE EQUIPMENT THAT IS MATCHING AND FUNCTIONAL IN DESIGN, AND A FINAL PRODUCT THAT MEETS THE OVERALL SPECIFICATION AND DESIGN INTENT.
2. ALL CONDUIT EXPOSED TO THE ELEMENTS TO BE RIGID GALVANIZED STEEL WATERTIGHT WITH WATERTIGHT CONNECTIONS.
3. ALL CONDUIT INSTALLED INDOORS TO BE GALVANIZED STEEL EMT.
4. FINAL CONNECTION TO CAMERA HOUSING MAY BE WATERTIGHT FLEXIBLE CONDUIT WHERE APPROPRIATE.
5. RE-USE OF EXISTING CONDUIT WHERE POSSIBLE IS ENCOURAGED.
6. ALL CONDUIT, ENCLOSURES, AND DEVICES TO BE SECURED TO SOLID STRUCTURE FOLLOWING ALL CITY AND STATE CODES AND MANUFACTURERS RECOMMENDED INSTALLATION INSTRUCTIONS.
7. MINIMUM CONDUIT SIZE IS TO BE NO SMALLER THAN 3/4".
8. ALL PENETRATIONS THROUGH EXTERIOR WALLS TO BE SEALED WATERTIGHT.
9. USE OF FIRESTOP SEALANT TO BE USED ON ALL PENETRATIONS MADE INDOORS THROUGH ANY FIRE RATED WALL
10. EXISTING OM1 FIBER WILL BE REPLACED WITH OM-3 AND A FIBER STRAND TESTING MACHINE GENERATED COMPLIANCE CERTIFICATE, PASSING ALL TEST PARAMETERS BASED ON IEC 61280-4-1 TESTING STANDARDS WILL BE PERFORMED.
11. ALL WIRING SHALL BE ENCLOSED IN CONDUIT WHERE NOT ENCLOSED IN A CEILING OR WALL. WHERE WIRING RUNS THROUGH A DROP CEILING IT WILL BE SUPPORTED AT LEAST 4" ABOVE ANY LIGHT FIXTURE AND 6" FROM ANY HIGH VOLTAGE LINE USING "J" HOOK TYPE SUPPORTS ANCHORED TO THE EXISTING STRUCTURE. USE OF DROP CEILING SUPPORT STRUCTURE IS PROHIBITED.
12. WHERE OLD WIRING IS NO LONGER IN USE IT MUST BE REMOVED TO ALLOW FOR THE PROPER FILL RATIO INSIDE THE CONDUIT.
13. ALL NEW CONDUIT MUST BE INSTALLED IN A PROFESSIONAL AND WORKMAN LIKE MANNER TAKING INTO ACCOUNT LEVEL AND PLUMB AS WELL AS FACILITY AESTHETICS.
14. EXISTING CAT6 WIRING TO CAMERAS MAY BE RETAINED IF CONTRACTOR PROVIDES A COPPER WIRE TESTING MACHINE GENERATED COMPLIANCE CERTIFICATE, PASSING ALL TEST PARAMETERS BASED ON TIA-568-B & ISO 11801:2002 TESTING STANDARDS.

CAMERA AND ETHERNET SWITCH NOTES

1. ALL CAMERAS TO BE NETWORK IP TYPE POWERED BY POE+.
2. ALL POE NETWORK SWITCHES TO BE COMPLIANT WITH 802.3 AF AND 802.3 AT STANDARDS.
3. WHEN RE-USING AN EXISTING CAMERA HOUSING, REFURBISH ANY BAD HOUSING SEALS, AND CLEAN GLASS INSIDE AND OUT.
4. ALL 180 DEGREE MULTI-SENSOR CAMERAS WILL BE PROPERLY ALIGNED AND ADJUSTED FOR SEAMLESS PANORAMIC VIEW ACROSS ENTIRE PICTURE.
5. ALL CAMERAS WILL BE MOUNTED WITH MANUFACTURERS RECOMMENDED MOUNTING HARDWARE.
6. CAMERA MOUNTING METHOD WILL BE DETERMINED BASED ON CAMERA TYPE AND FINAL MOUNTING LOCATION, EACH MOUNTING TYPE WILL BE CONFIRMED PRIOR TO INSTALLATION.

CAMERA LISTING

ITEM#	TYPE	LOCATION DESCRIPTION
GG-01	TYPE III	MAINTENANCE BUILDING NORTH PTZ
GG-02	TYPE VI	TIRE SHOP LONG RANGE CLOSE UP CAMERA
GG-03	TYPE I	MAINTENANCE BUILDING NORTH PARKING OVERVIEW
GG-04	TYPE I	MAINTENANCE BUILDING NORTHWEST PARKING OVERVIEW
GG-05	TYPE I	MAINTENANCE BUILDING SOUTHWEST PARKING OVERVIEW
GG-06	TYPE III	MAINTENANCE BUILDING SOUTH PTZ
GG-07	TYPE I	MAINTENANCE BUILDING SOUTH PARKING OVERVIEW
GG-08	TYPE I	MAINTENANCE BUILDING SOUTHEAST PARKING OVERVIEW
GG-09	TYPE I	MAINTENANCE BUILDING NORTHEAST PARKING OVERVIEW
GG-10	TYPE I	BUS WASH PARKING NORTH OVERVIEW
GG-11	TYPE I	BUS WASH PARKING WEST OVERVIEW
GG-12	TYPE I	BRAKE CHECK BUS PARKING WEST OVERVIEW
GG-13	TYPE IV	FUELING AREA CASH DROP CAMERA
GG-14	TYPE IV	FUELING AREA CASH DROP CAMERA
GG-15	TYPE IV	FUELING AREA CASH DROP CAMERA
GG-16	TYPE IV	FUELING AREA CASH DROP CAMERA
GG-17	TYPE IV	FUELING AREA CASH DROP CAMERA
GG-18	TYPE IV	FUELING AREA CASH DROP CAMERA
GG-19	TYPE V	BUS DRIVEWAY LICENSE PLATE CAMERA
GG-20	TYPE I	CENTER PARKING LOT POLE WATCHING OPERATIONS BLDG.
GG-21	TYPE II	OPERATIONS EAST PUBLIC ENTRY CLOSE UP
GG-22	TYPE I	OPERATIONS EAST STREET AND FRONTAGE OVERVIEW
GG-23	TYPE II	OPERATIONS SOUTH ENTRY CLOSE UP
GG-24	TYPE I	OPERATIONS SOUTH PARKING OVERVIEW
GG-25	TYPE V	MAIN ENTRY DRIVEWAY LICENSE PLATE CAMERA
GG-26	TYPE I	OPERATIONS WEST PARKING OVERVIEW
GG-27	TYPE II	OPERATIONS WEST ENTRY CLOSE UP
GG-28	TYPE I	ANNEX BUILDING EAST PARKING OVERVIEW
GG-29	TYPE II	ANNEX BUILDING SOUTH DOCK AND DOORS CLOSE UP
GG-30	TYPE I	ANNEX BUILDING SOUTH PARKING OVERVIEW
GG-31	TYPE II	ANNEX BUILDING SOUTH ENTRY CLOSE UP
GG-32	TYPE I	ANNEX BUILDING WEST PARKING OVERVIEW
GG-33	TYPE III	ANNEX BUILDING PTZ
GG-34	TYPE II	ANNEX BUILDING NORTH ENTRANCE CLOSE UP
GG-35	TYPE I	ANNEX BUILDING NORTH PARKING OVERVIEW
GG-36	TYPE I	ANNEX BUILDING CASH DOCK OVERVIEW
GG-37	TYPE II	BUS SERVICE COUNTER WINDOWS CLOSE UP
GG-38	TYPE II	HALLWAY OUTSIDE PARTS ROOM OVERVIEW
GG-39	TYPE II	PARTS COUNTER WINDOWS CLOSE UP
GG-40	TYPE I	PARTS SHELVING ROWS AND STAIRWELL DOOR OVERVIEW
GG-41	TYPE I	PARTS SHELVING ROWS AND BACK DESK OVERVIEW
GG-42	TYPE II	PARTS FIRST FLOOR DOCK AREA OVERVIEW
GG-43	TYPE II	PARTS ROOM SECOND FLOOR OVERVIEW
GG-44	TYPE 1	OPERATIONS MAIN HALLWAY TRAFFIC CORRIDOR

CAMERA SCHEDULE

CAMERA TYPE	DESCRIPTION
TYPE I	12 MEGA PIXEL 180° MULTI-SENSOR DOME CAMERA
TYPE II	3 MEGA PIXEL DOME CAMERA (STANDARD VARIFOCAL LENS)
TYPE III	1080P PTZ CAMERA
TYPE IV	3 MEGA PIXEL BOX CAMERA WITH VARIFOCAL LENS INSTALLED INTO EXISTING HOUSING
TYPE V	3 MEGA PIXEL DOME LICENSE PLATE RECOGNITION CAMERA WITH VARIFOCAL LENS AND BUILT-IN IR LEDS
TYPE VI	3 MEGA PIXEL BULLET WITH VARIFOCAL LONG RANGE LENS

ETHERNET SWITCH SCHEDULE

SPECIFICATIONS BASED ON THE FOLLOWING SWITCHES. SUITABILITY FOR THIS PROJECT AND ALL CAPABILITIES AND PERFORMANCE FACTORS ARE THE RESPONSIBILITY OF THE CONTRACTOR.

1. SWITCH-1 = CISCO CATALYST WS-C3850-48U WITH ONE C3850-NM-4-10G AND A MATCHING QUANTITY OF COMPATIBLE CISCO SFP+ MODULES
2. SWITCH-2 = CISCO CATALYST WS-C3850-24XU WITH ONE C3850-NM-4-10G AND A MATCHING QUANTITY OF COMPATIBLE CISCO SFP+ MODULES
3. SWITCH-3 = CISCO CATALYST WS-C3850-24XU WITH ONE C3850-NM-4-10G AND A MATCHING QUANTITY OF COMPATIBLE CISCO SFP+ MODULES
4. SWITCH-4 = CISCO CATALYST WS-C3850-24XU WITH ONE C3850-NM-4-10G AND A MATCHING QUANTITY OF COMPATIBLE CISCO SFP+ MODULES
5. SWITCH-5 = CISCO CATALYST C3560CX-12PD WITH A MATCHING QUANTITY OF COMPATIBLE CISCO SFP+ MODULES
6. ENCLOSURE 1 = COMNET ETHERNET 2 PORT SWITCH CNGE2+2SMSPOEHO WITH COMPATIBLE 1GB SFP/SFP+ MODULES
7. ENCLOSURE 2 = COMNET ETHERNET 2 PORT SWITCH CNGE2+2SMSPOEHO WITH COMPATIBLE 1GB SFP/SFP+ MODULES

SYMBOLS LEGEND

SYMBOL	DESCRIPTION
	EXISTING UNDERGROUND CONDUIT
	CATEGORY 6 (CAT6) CONNECTION
	OM3 50 MICRON LASER ENHANCE FIBER OPTIC CABLING
C	1 GIGABIT COPPER TO FIBER MEDIA CONVERTOR WITH SFP MODULE
1 Gb	1 GIGABIT POE+ ETHERNET SWITCH
10 Gb	10 GIGABIT POE+ ETHERNET SWIITCH
180	TYPE 1 - 180 DEGREE MEGAPIXEL SENSOR IP DOME CAMERA
MP	TYPE II - VARIFOCAL MEGAPIXEL MULTI IMAGER IP DOME CAMERA
PTZ	TYPE III - PAN-TILT-ZOOM, MEGAPIXEL SINGLE SENSOR IP DOME CAMERA
MP HD	TYPE IV - VARIFOCAL MEGAPIXEL SINGLE SENSOR IP BOX CAMERA WITH LENS
LPR	TYPE V - VERIFOCAL MEGAPIXEL SINGLE IP LICENSE PLATE CAMERA WITH BUILT-IN IR LEDS
MP LR HD	TYPE VI - VARIFOCAL MEGAPIXEL SINGLE SENSOR IP BOX CAMERA WITH LONG RANGE LENS
ENC 1	ENCLOSURE, CAMERA EQUIPMENT ENCLOSURE WITH NOTATED NUMBER OF CAMERAS

CAMERA FIELD OF VIEW EXPRESSION EXAMPLE:

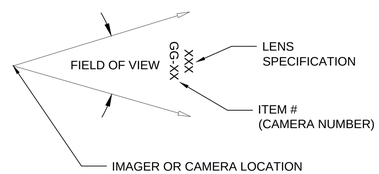

CONFIRM ALL FIELDS OF VIEWS WITH OWNER DURING FINAL CAMERA PLACEMENT, AND REFINE VIEWS DURING FINAL SYSTEM CHECKOUT.

ABBREVIATIONS

ABBR.	ABBREVIATIONS
AFF.	ABOVE FINISHED FLOOR
ACP.	ACCESS CONTROL PANEL
AWG.	AMERICAN WIRE GAUGE
CCTV.	CLOSED CIRCUIT TELEVISION
DC.	DIRECT CURRENT
DIA.	DIAMETER
DIM.	DIMENSION
DIV.	DIVISION
DGP.	DATA GATHERING PANEL
DPDT.	DOUBLE POLE DOUBLE THROW
DPST.	DOUBLE POLE SINGLE THROW
ELEC.	ELECTRICAL
FF.	FINISHED FLOOR
FFE.	FINISHED FLOOR ELEVATION
FFL.	FINISHED FLOOR LINE
FL	FLOOR
FT	FOOT, FEET,
GC	GENERAL CONTRACTOR
GFCI	GROUND FAULT CIRCUIT INTERRUPTED
HT	HEIGHT
HH	HANDHOLE
ID	INSIDE DIAMETER
IDS	INTRUSION DETECTION SYSTEMS
JBOX	JUNCTION BOX
LCD	LIQUID CRYSTAL DIODE
LV	LOW VOLTAGE
MH	MANHOLE
MM	MILLIMETER
NC	NORMALLY CLOSED
NEC	NATIONAL ELECTRICAL CODE
NIC	NOT IN CONTRACT
NO	NORMALLY OPEN
NTS	NOT TO SCALE
OD	OUTSIDE DIAMETER
PA	PUBLIC ADDRESS
QTY	QUANTITY
RCP	REFLECTED CEILING PLAN
REF	REFERENCE
REV	REVISION
RM	ROOM
SMS	SECURITY MANAGEMENT SYSTEM
SF	SQUARE FOOT
TSP	TWISTED SHEILDED PAIR
TRANS	TRANSFORMER
UL	UNDERWRITERS' LABORATORIES
UNO	UNLESS NOTED OTHERWISE
UTP	UNSHEILDED TWISTED PAIR
V	VOLT
VA	VOLT AMPERE
VMS	VIDEO MANAGEMENT SYSTEM

PROJECT

Orange County Transportation Authority

GARDEN GROVE BUS MAINTENANCE FACILITY

REDFIVE SECURITY

CONSULTANT

ALL DETAIL DRAWINGS AND DESIGN ELEMENTS ON THESE SHEETS ARE A BASIS OF DESIGN ONLY AND ARE A GENERAL REPRESENTATION OF THE QUALITY AND TYPE OF EQUIPMENT, INSTALLATION, AND WORKMANSHIP OF THE FINAL PRODUCT REQUIRED FOR THIS PROJECT. INSTALLATION CONTRACTOR IS ULTIMATELY RESPONSIBLE TO PROVIDE EQUIPMENT THAT IS MATCHING AND FUNCTIONAL IN DESIGN, AND A FINAL PRODUCT THAT MEETS THE OVERALL SPECIFICATION AND DESIGN INTENT

KEY PLAN

Issued Drawing Log

No.	Date	Item
1	11/14/16	60% DESIGN DRAWINGS
#	12/04/16	60% DD AFTER JOBWALK
#	12/30/16	85% CD DRAWINGS
#	01/27/17	100% CD DRAWINGS
#		
#		
#		

STAMP

DRAWING TITLE

GARDEN GROVE
GENERAL NOTES, SYMBOLS
SCHEDULES & ABBREVIATIONS

DRAWN BY REDS	PROJECT NO.
CHECKED REDS	SCALE N.T.S.
APPROVED REDS	CAD FILE

SC.001

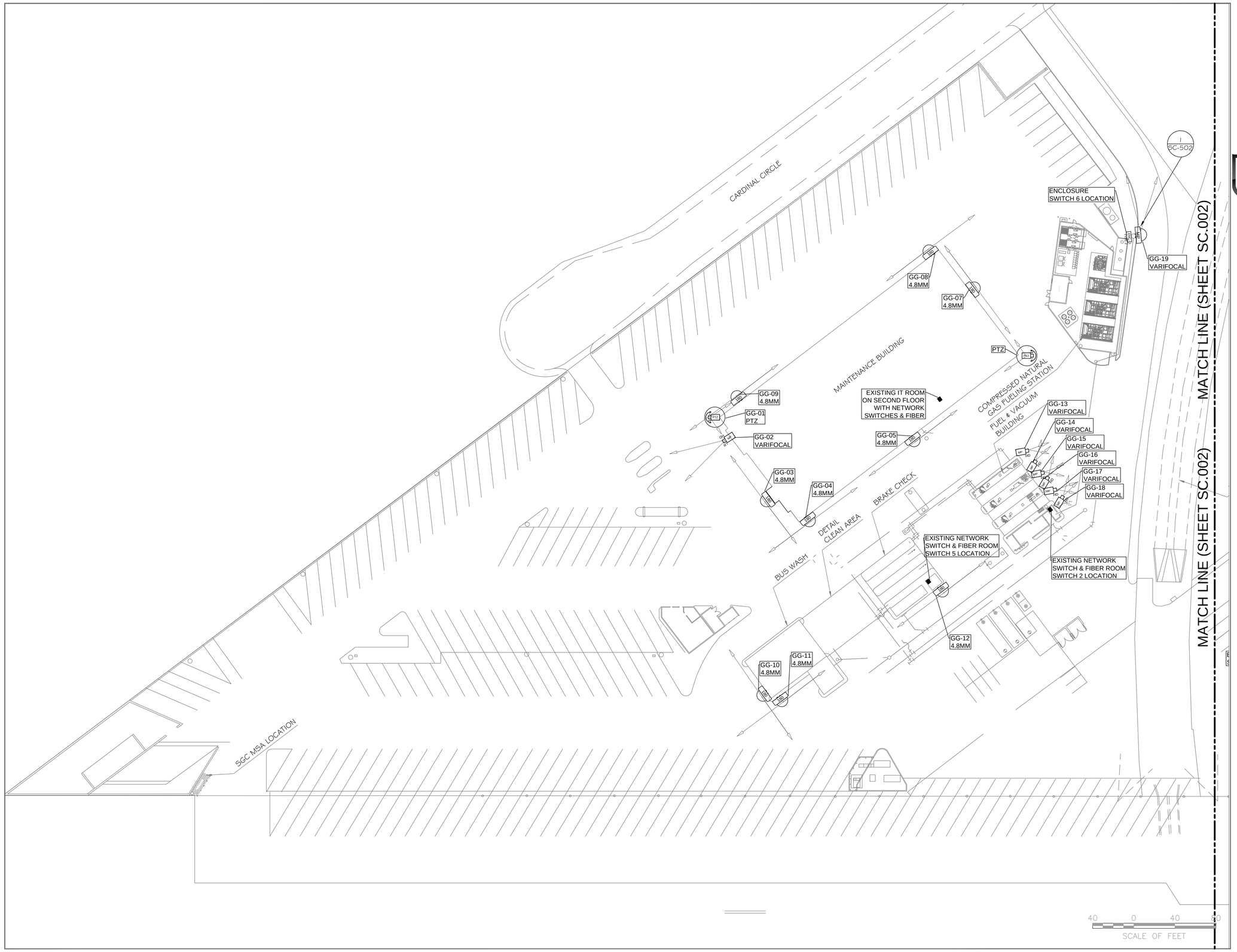

PROJECT

Orange County Transportation Authority
OCTA

GARDEN GROVE BUS MAINTENANCE FACILITY

REDFIVE SECURITY

CONSULTANT

ALL DETAIL DRAWINGS AND DESIGN ELEMENTS ON THESE SHEETS ARE A BASIS OF DESIGN ONLY AND ARE A GENERAL REPRESENTATION OF THE QUALITY AND TYPE OF EQUIPMENT, INSTALLATION, AND WORKMANSHIP OF THE FINAL PRODUCT REQUIRED FOR THIS PROJECT. INSTALLATION CONTRACTOR IS ULTIMATELY RESPONSIBLE TO PROVIDE EQUIPMENT THAT IS MATCHING AND FUNCTIONAL IN DESIGN, AND A FINAL PRODUCT THAT MEETS THE OVERALL SPECIFICATION AND DESIGN INTENT

KEY PLAN

Issued Drawing Log

No.	Date	Item
1	11/14/16	60% DESIGN DRAWINGS
#	12/04/16	60% DD AFTER JOBWALK
#	12/30/16	85% CD DRAWINGS
#	01/27/17	100% CD DRAWINGS
#		
#		
#		

STAMP

DRAWING TITLE

GARDEN GROVE
SITE PLAN NORTH

DRAWN BY REDS	PROJECT NO.
CHECKED REDS	SCALE N.T.S.
APPROVED REDS	CAD FILE

SC.002

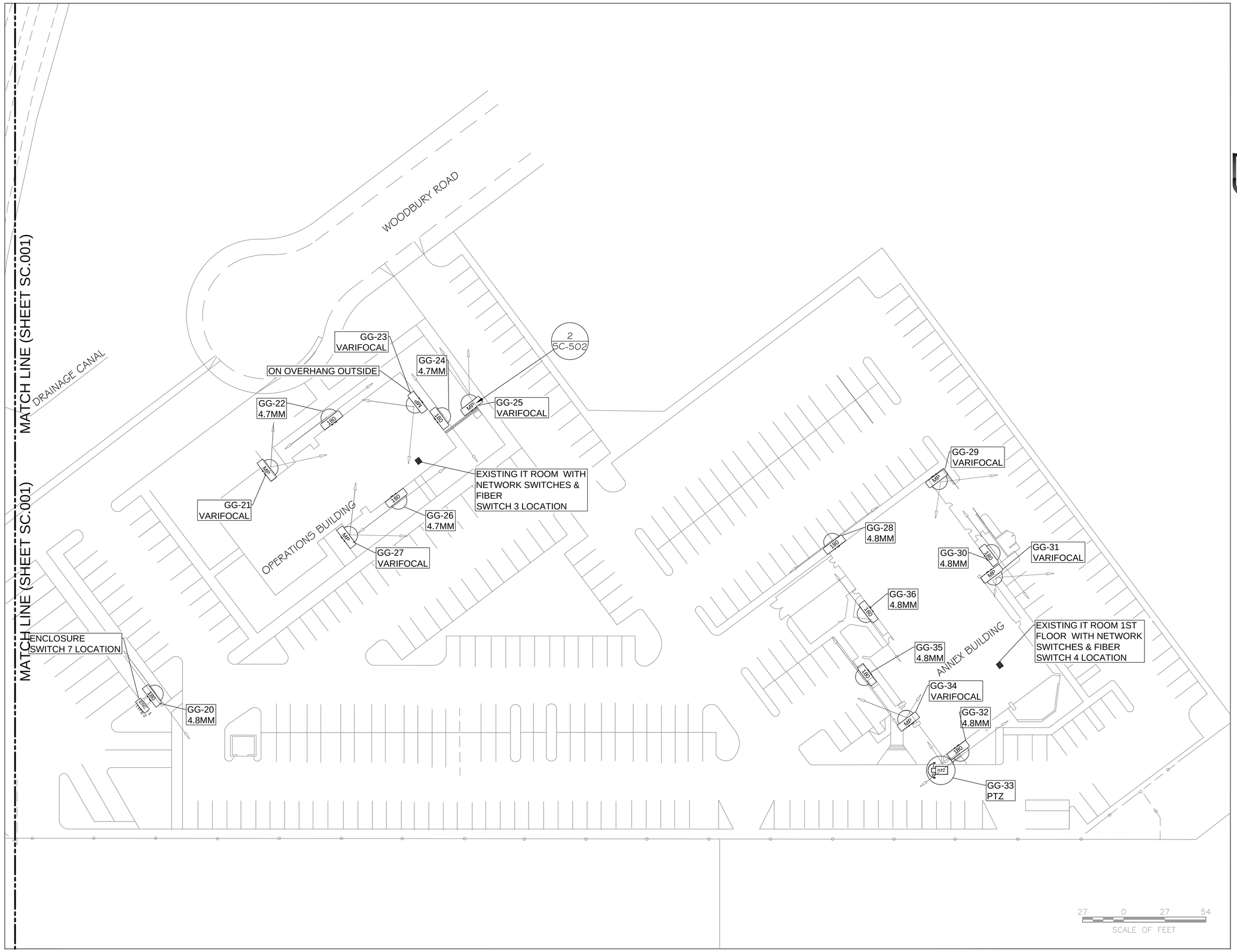

PROJECT

Orange County Transportation Authority
OCTA

GARDEN GROVE BUS
MAINTENANCE FACILITY

REDFIVE SECURITY

CONSULTANT

ALL DETAIL DRAWINGS AND DESIGN ELEMENTS ON THESE SHEETS ARE A BASIS OF DESIGN ONLY AND ARE A GENERAL REPRESENTATION OF THE QUALITY AND TYPE OF EQUIPMENT, INSTALLATION, AND WORKMANSHIP OF THE FINAL PRODUCT REQUIRED FOR THIS PROJECT. INSTALLATION CONTRACTOR IS ULTIMATELY RESPONSIBLE TO PROVIDE EQUIPMENT THAT IS MATCHING AND FUNCTIONAL IN DESIGN, AND A FINAL PRODUCT THAT MEETS THE OVERALL SPECIFICATION AND DESIGN INTENT

KEY PLAN

Issued Drawing Log

No.	Date	Item
1	11/14/16	60% DESIGN DRAWINGS
#	12/04/16	60% DD AFTER JOBWALK
#	12/30/16	85% CD DRAWINGS
#	01/27/17	100% CD DRAWINGS
#		
#		
#		

STAMP

DRAWING TITLE

GARDEN GROVE
SITE PLAN SOUTH

DRAWN BY REDS	PROJECT NO.
CHECKED REDS	SCALE N.T.S.
APPROVED REDS	CAD FILE

SC.003

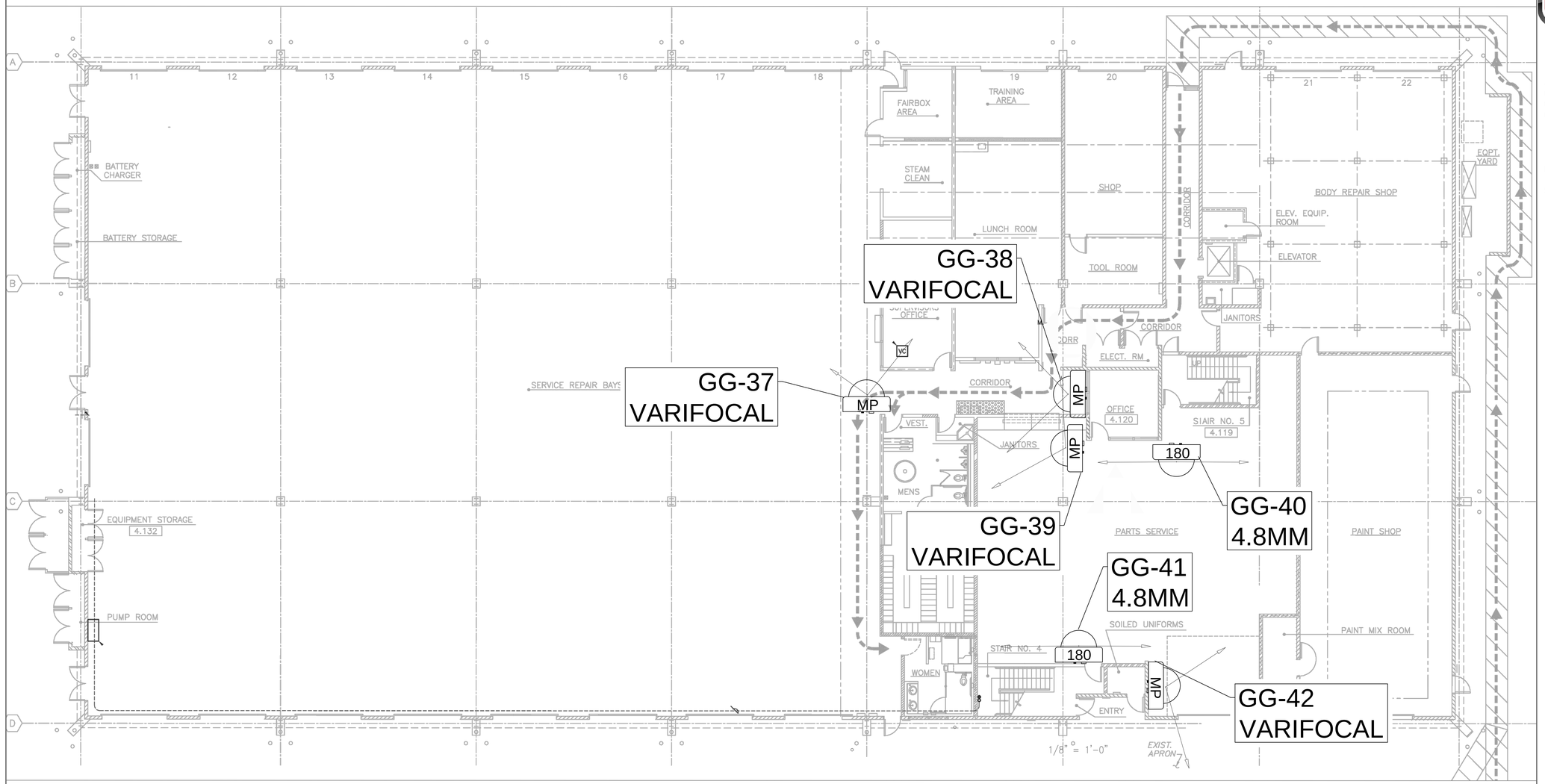

PROJECT

Orange County Transportation Authority
OCTA

GARDEN GROVE BUS MAINTENANCE FACILITY

CONSULTANT

REDFIVE SECURITY

ALL DETAIL DRAWINGS AND DESIGN ELEMENTS ON THESE SHEETS ARE A BASIS OF DESIGN ONLY AND ARE A GENERAL REPRESENTATION OF THE QUALITY AND TYPE OF EQUIPMENT, INSTALLATION, AND WORKMANSHIP OF THE FINAL PRODUCT REQUIRED FOR THIS PROJECT. INSTALLATION CONTRACTOR IS ULTIMATELY RESPONSIBLE TO PROVIDE EQUIPMENT THAT IS MATCHING AND FUNCTIONAL IN DESIGN, AND A FINAL PRODUCT THAT MEETS THE OVERALL SPECIFICATION AND DESIGN INTENT

KEY PLAN

Issued Drawing Log

No.	Date	Item
1	11/14/16	60% DESIGN DRAWINGS
#	12/04/16	60% DD AFTER JOBWALK
#	12/30/16	85% CD DRAWINGS
#	01/27/17	100% CD DRAWINGS
#		
#		
#		

STAMP

DRAWING TITLE

GARDEN GROVE MAINTENANCE BUILDING FIRST FLOOR

DRAWN BY REDS	PROJECT NO.
CHECKED REDS	SCALE N.T.S.
APPROVED REDS	CAD FILE

SC.101

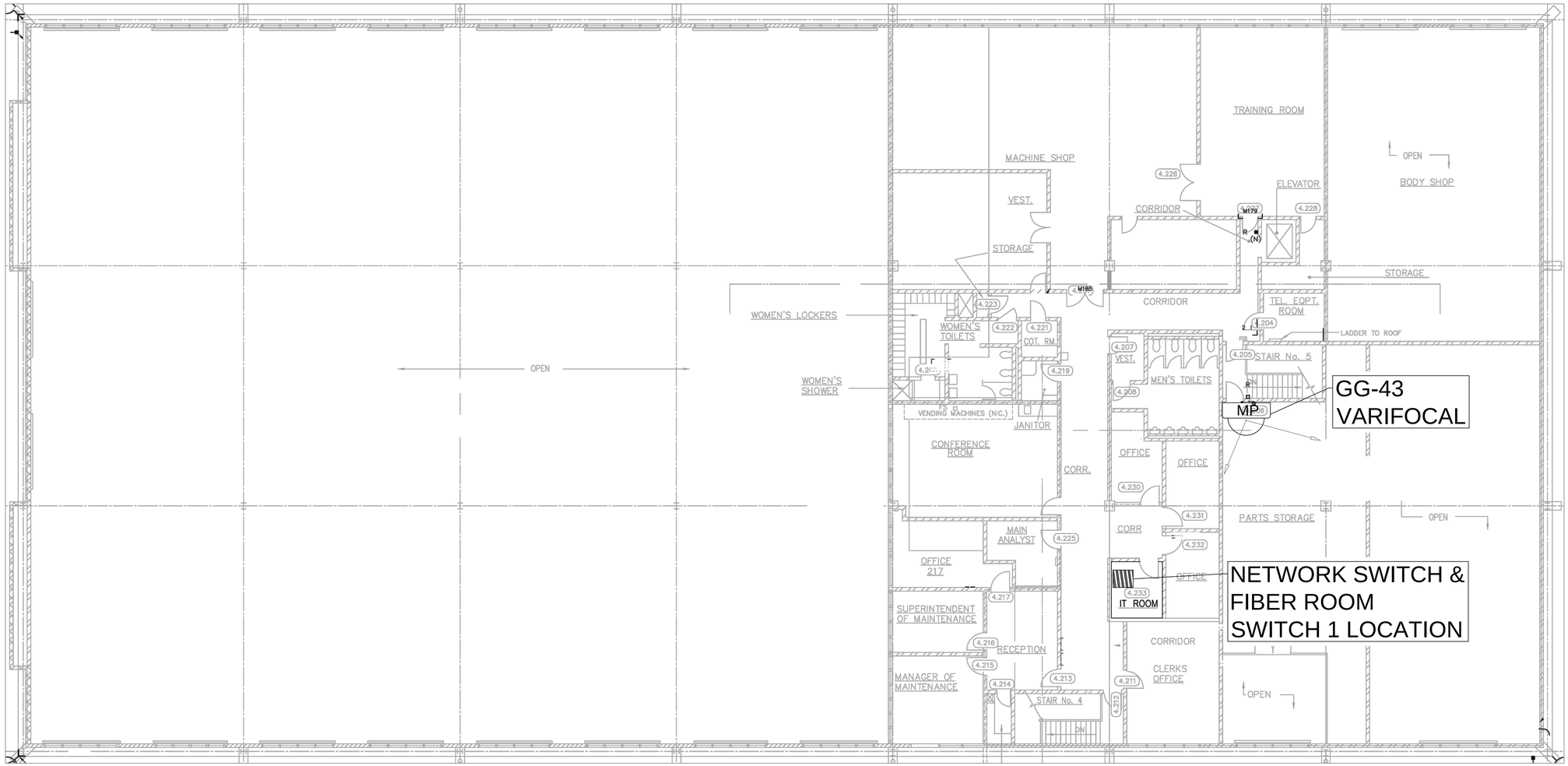

PROJECT

Orange County Transportation Authority
OCTA

GARDEN GROVE BUS
MAINTENANCE FACILITY

REDFIVE SECURITY

CONSULTANT

ALL DETAIL DRAWINGS AND DESIGN ELEMENTS ON THESE SHEETS ARE A BASIS OF DESIGN ONLY AND ARE A GENERAL REPRESENTATION OF THE QUALITY AND TYPE OF EQUIPMENT, INSTALLATION, AND WORKMANSHIP OF THE FINAL PRODUCT REQUIRED FOR THIS PROJECT. INSTALLATION CONTRACTOR IS ULTIMATELY RESPONSIBLE TO PROVIDE EQUIPMENT THAT IS MATCHING AND FUNCTIONAL IN DESIGN, AND A FINAL PRODUCT THAT MEETS THE OVERALL SPECIFICATION AND DESIGN INTENT

KEY PLAN

Issued Drawing Log

No.	Date	Item
1	11/14/16	60% DESIGN DRAWINGS
#	12/04/16	60% DD AFTER JOBWALK
#	12/30/16	85% CD DRAWINGS
#	01/27/17	100% CD DRAWINGS
#		
#		
#		

STAMP

DRAWING TITLE

GARDEN GROVE
MAINTENANCE BUILDING
SECOND FLOOR

DRAWN BY REDS	PROJECT NO.
CHECKED REDS	SCALE N.T.S.
APPROVED REDS	CAD FILE

SC.102

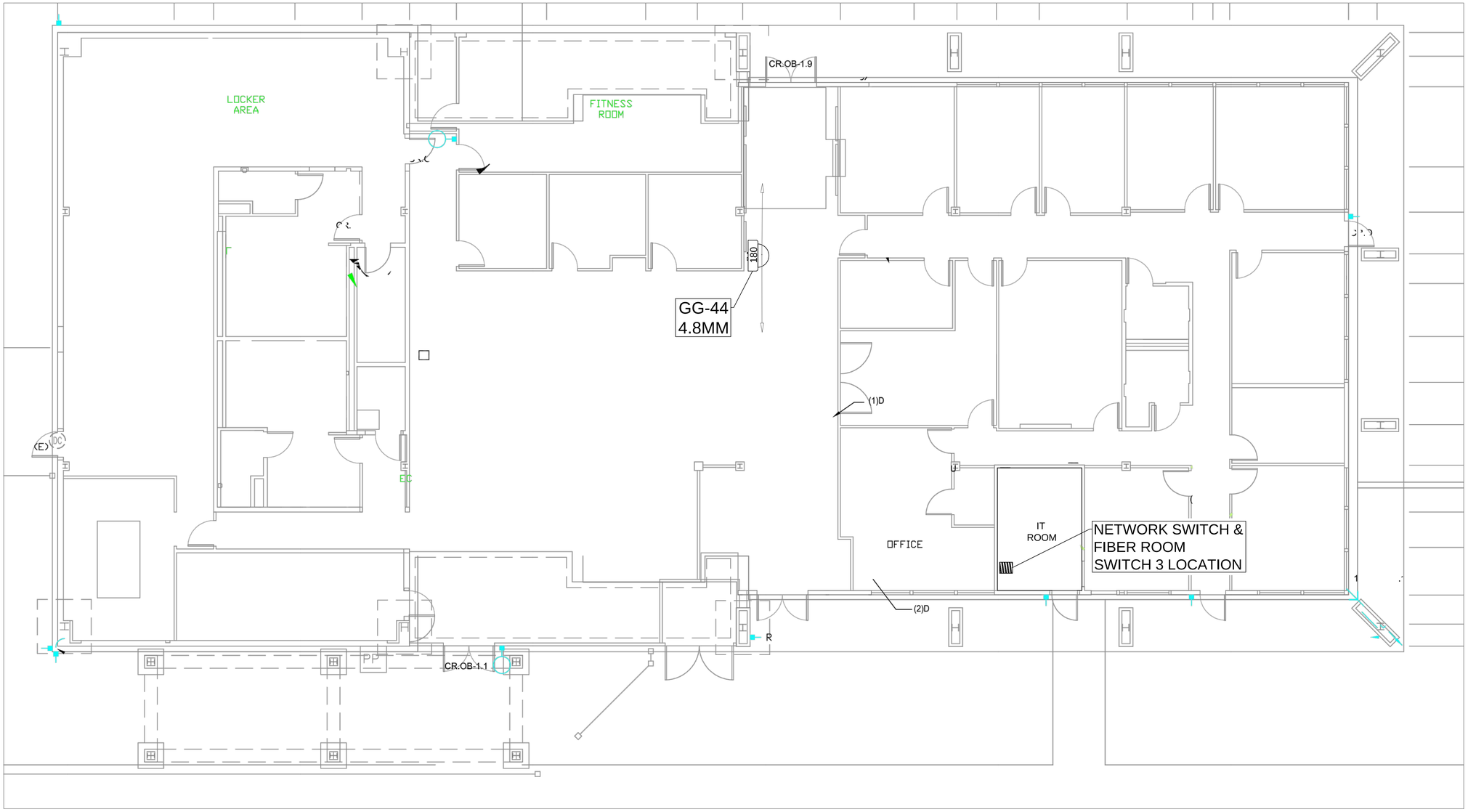

8 0 8 16

SCALE OF FEET

PROJECT

Orange County Transportation Authority
OCTA

GARDEN GROVE BUS MAINTENANCE FACILITY

REDFIVE SECURITY

CONSULTANT

ALL DETAIL DRAWINGS AND DESIGN ELEMENTS ON THESE SHEETS ARE A BASIS OF DESIGN ONLY AND ARE A GENERAL REPRESENTATION OF THE QUALITY AND TYPE OF EQUIPMENT, INSTALLATION, AND WORKMANSHIP OF THE FINAL PRODUCT REQUIRED FOR THIS PROJECT. INSTALLATION CONTRACTOR IS ULTIMATELY RESPONSIBLE TO PROVIDE EQUIPMENT THAT IS MATCHING AND FUNCTIONAL IN DESIGN, AND A FINAL PRODUCT THAT MEETS THE OVERALL SPECIFICATION AND DESIGN INTENT

KEY PLAN

Issued Drawing Log

No.	Date	Item
1	11/14/16	60% DESIGN DRAWINGS
#	12/04/16	60% DD AFTER JOBWALK
#	12/30/16	85% CD DRAWINGS
#	01/27/17	100% CD DRAWINGS
#		
#		
#		

STAMP

DRAWING TITLE

GARDEN GROVE OPERATIONS BUILDING FIRST FLOOR

DRAWN BY REDS	PROJECT NO.
CHECKED REDS	SCALE N.T.S.
APPROVED REDS	CAD FILE

SC.103

LOCATION OF EXISTING CAMERAS, SWITCHES AND VARIOUS ACCESSORIES TO BE REMOVED AND RETURNED TO OCTA REPRESENTATIVE.

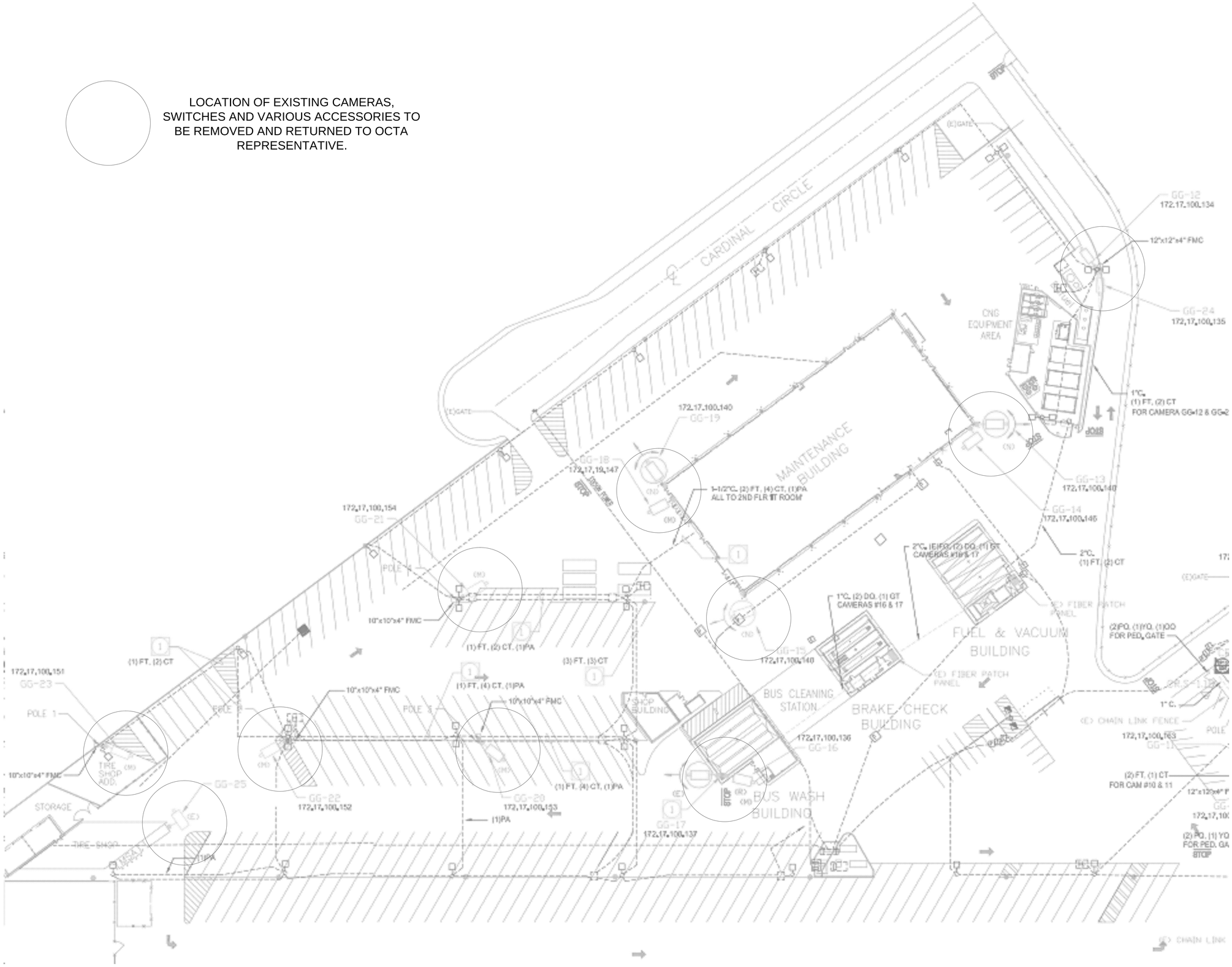

PROJECT

Orange County Transportation Authority

GARDEN GROVE BUS MAINTENANCE FACILITY

REDFIVE SECURITY

CONSULTANT

ALL DETAIL DRAWINGS AND DESIGN ELEMENTS ON THESE SHEETS ARE A BASIS OF DESIGN ONLY AND ARE A GENERAL REPRESENTATION OF THE QUALITY AND TYPE OF EQUIPMENT, INSTALLATION, AND WORKMANSHIP OF THE FINAL PRODUCT REQUIRED FOR THIS PROJECT. INSTALLATION CONTRACTOR IS ULTIMATELY RESPONSIBLE TO PROVIDE EQUIPMENT THAT IS MATCHING AND FUNCTIONAL IN DESIGN, AND A FINAL PRODUCT THAT MEETS THE OVERALL SPECIFICATION AND DESIGN INTENT

KEY PLAN

Issued Drawing Log

No.	Date	Item
1	11/14/16	60% DESIGN DRAWINGS
#	12/04/16	60% DD AFTER JOBWALK
#	12/30/16	85% CD DRAWINGS
#	01/27/17	100% CD DRAWINGS
#		
#		
#		

STAMP

DRAWING TITLE

GARDEN GROVE
EXISTING CAMERA DEMOLITION
WEST SITE PLAN

DRAWN BY REDS	PROJECT NO.
CHECKED REDS	SCALE N.T.S.
APPROVED REDS	CAD FILE

SC.201

LOCATION OF EXISTING CAMERAS, SWITCHES AND VARIOUS ACCESSORIES TO BE REMOVED AND RETURNED TO OCTA REPRESENTATIVE.

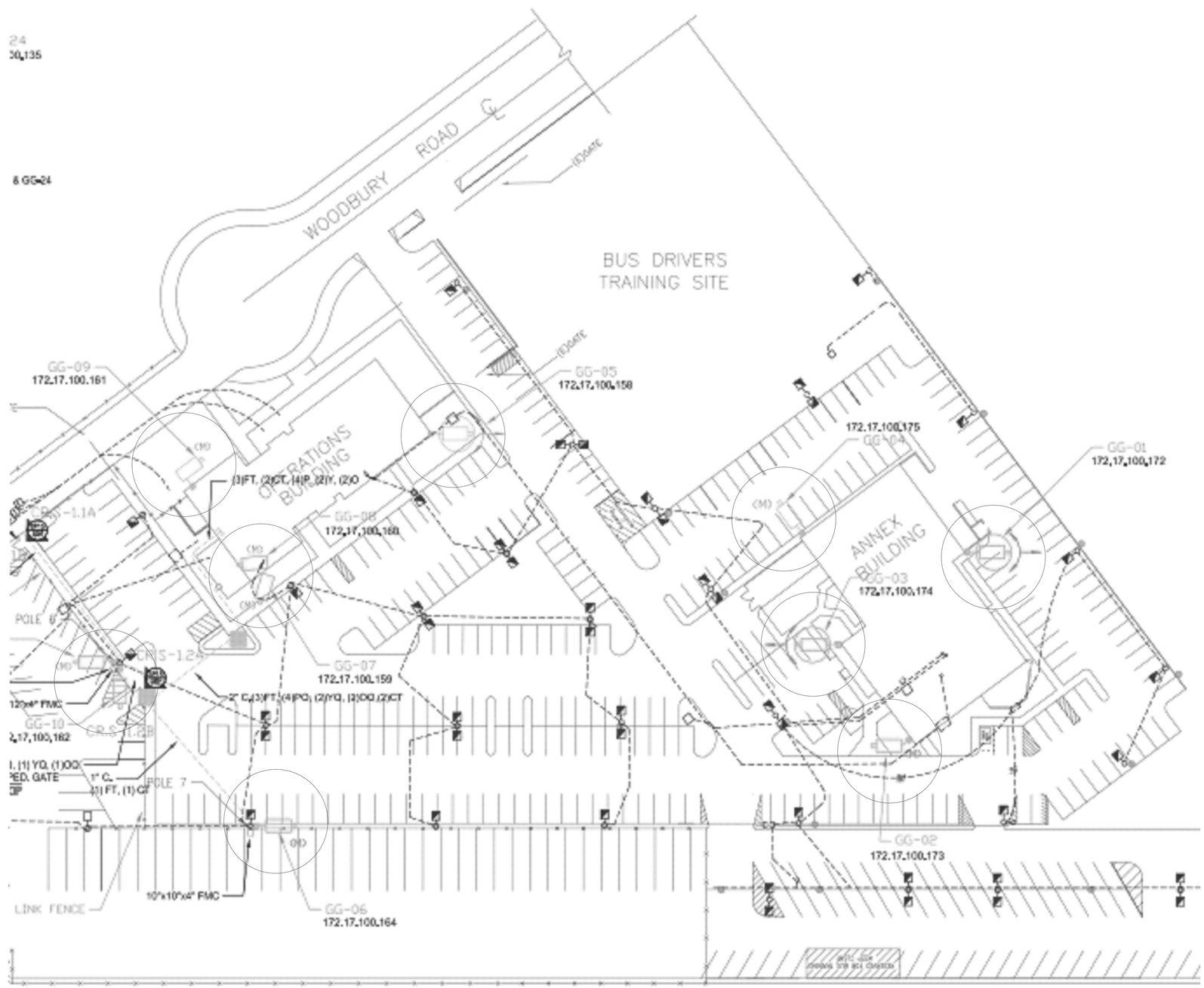

PROJECT

Orange County Transportation Authority

GARDEN GROVE BUS MAINTENANCE FACILITY

CONSULTANT

REDFIVE SECURITY

ALL DETAIL DRAWINGS AND DESIGN ELEMENTS ON THESE SHEETS ARE A BASIS OF DESIGN ONLY AND ARE A GENERAL REPRESENTATION OF THE QUALITY AND TYPE OF EQUIPMENT, INSTALLATION, AND WORKMANSHIP OF THE FINAL PRODUCT REQUIRED FOR THIS PROJECT. INSTALLATION CONTRACTOR IS ULTIMATELY RESPONSIBLE TO PROVIDE EQUIPMENT THAT IS MATCHING AND FUNCTIONAL IN DESIGN, AND A FINAL PRODUCT THAT MEETS THE OVERALL SPECIFICATION AND DESIGN INTENT

KEY PLAN

Issued Drawing Log

No.	Date	Item
1	11/14/16	60% DESIGN DRAWINGS
#	12/04/16	60% DD AFTER JOBWALK
#	12/30/16	85% CD DRAWINGS
#	01/27/17	100% CD DRAWINGS
#		
#		
#		

STAMP

DRAWING TITLE

GARDEN GROVE
EXISTING CAMERA DEMOLITION
EAST SITE PLAN

DRAWN BY REDS	PROJECT NO.
CHECKED REDS	SCALE N.T.S.
APPROVED REDS	CAD FILE

SC.202

LOCATION OF EXISTING CAMERAS, SWITCHES AND VARIOUS ACCESSORIES TO BE REMOVED AND RETURNED TO OCTA REPRESENTATIVE.

MAINTENANCE BUILDING 1ST FLOOR

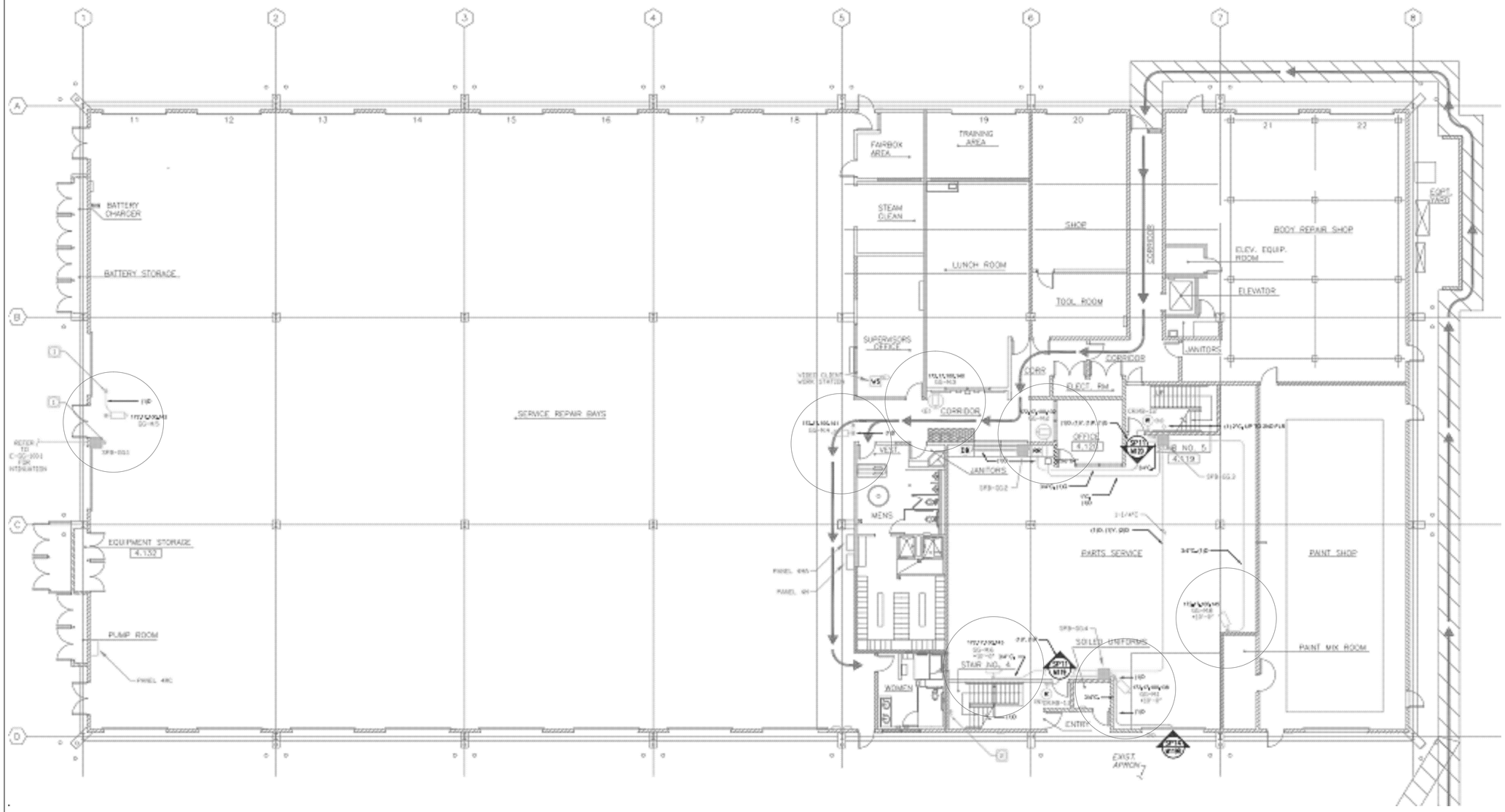

PROJECT

Orange County Transportation Authority

GARDEN GROVE BUS MAINTENANCE FACILITY

CONSULTANT

REDFIVE SECURITY

ALL DETAIL DRAWINGS AND DESIGN ELEMENTS ON THESE SHEETS ARE A BASIS OF DESIGN ONLY AND ARE A GENERAL REPRESENTATION OF THE QUALITY AND TYPE OF EQUIPMENT, INSTALLATION, AND WORKMANSHIP OF THE FINAL PRODUCT REQUIRED FOR THIS PROJECT. INSTALLATION CONTRACTOR IS ULTIMATELY RESPONSIBLE TO PROVIDE EQUIPMENT THAT IS MATCHING AND FUNCTIONAL IN DESIGN, AND A FINAL PRODUCT THAT MEETS THE OVERALL SPECIFICATION AND DESIGN INTENT

KEY PLAN

Issued Drawing Log

No.	Date	Item
1	11/14/16	60% DESIGN DRAWINGS
#	12/04/16	60% DD AFTER JOBWALK
#	12/30/16	85% CD DRAWINGS
#	01/27/17	100% CD DRAWINGS
#		
#		
#		

STAMP

DRAWING TITLE

GARDEN GROVE
EXISTING CAMERA DEMOLITION
MAINTENANCE 1ST FLOOR

DRAWN BY REDS	PROJECT NO.
CHECKED REDS	SCALE N.T.S.
APPROVED REDS	CAD FILE

SC.203

LOCATION OF EXISTING CAMERAS, SWITCHES AND VARIOUS ACCESSORIES TO BE REMOVED AND RETURNED TO OCTA REPRESENTATIVE.

MAINTENANCE BUILDING 2ND FLOOR

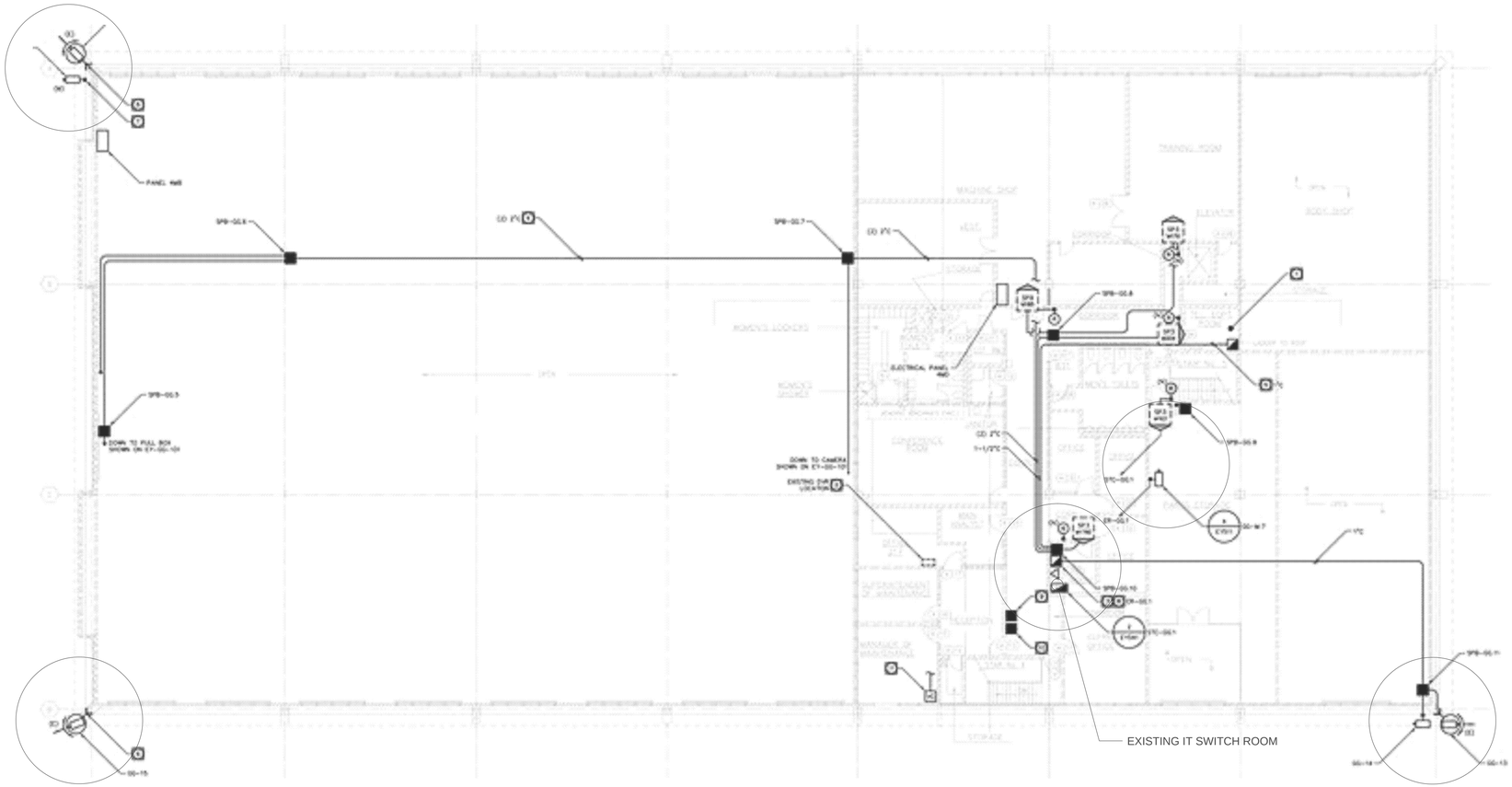

PROJECT

Orange County Transportation Authority

GARDEN GROVE BUS MAINTENANCE FACILITY

REDFIVE SECURITY

CONSULTANT

ALL DETAIL DRAWINGS AND DESIGN ELEMENTS ON THESE SHEETS ARE A BASIS OF DESIGN ONLY AND ARE A GENERAL REPRESENTATION OF THE QUALITY AND TYPE OF EQUIPMENT, INSTALLATION, AND WORKMANSHIP OF THE FINAL PRODUCT REQUIRED FOR THIS PROJECT. INSTALLATION CONTRACTOR IS ULTIMATELY RESPONSIBLE TO PROVIDE EQUIPMENT THAT IS MATCHING AND FUNCTIONAL IN DESIGN, AND A FINAL PRODUCT THAT MEETS THE OVERALL SPECIFICATION AND DESIGN INTENT

KEY PLAN

Issued Drawing Log

No.	Date	Item
1	11/14/16	60% DESIGN DRAWINGS
#	12/04/16	60% DD AFTER JOBWALK
#	12/30/16	85% CD DRAWINGS
#	01/27/17	100% CD DRAWINGS
#		
#		
#		

STAMP

DRAWING TITLE

GARDEN GROVE
EXISTING CAMERA DEMOLITION
MAINTENANCE 2ND FLOOR

DRAWN BY: REDS	PROJECT NO.
CHECKED: REDS	SCALE: N.T.S.
APPROVED: REDS	CAD FILE

SC.204

LOCATION OF EXISTING CAMERAS, SWITCHES AND VARIOUS ACCESSORIES TO BE REMOVED AND RETURNED TO OCTA REPRESENTATIVE.

OPERATIONS BUILDING

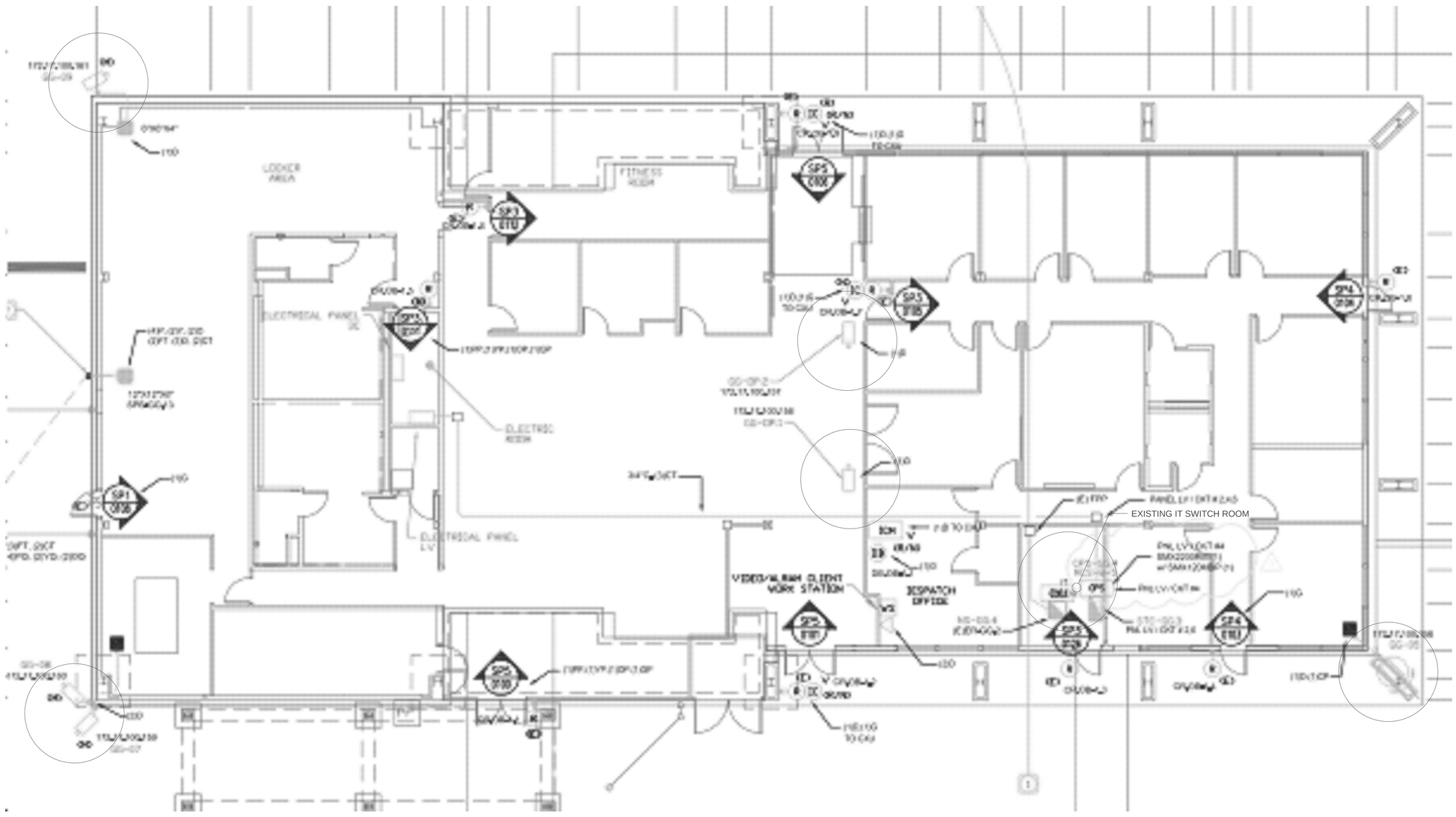

PROJECT

Orange County Transportation Authority

GARDEN GROVE BUS MAINTENANCE FACILITY

REDFIVE SECURITY

CONSULTANT

ALL DETAIL DRAWINGS AND DESIGN ELEMENTS ON THESE SHEETS ARE A BASIS OF DESIGN ONLY AND ARE A GENERAL REPRESENTATION OF THE QUALITY AND TYPE OF EQUIPMENT, INSTALLATION, AND WORKMANSHIP OF THE FINAL PRODUCT REQUIRED FOR THIS PROJECT. INSTALLATION CONTRACTOR IS ULTIMATELY RESPONSIBLE TO PROVIDE EQUIPMENT THAT IS MATCHING AND FUNCTIONAL IN DESIGN, AND A FINAL PRODUCT THAT MEETS THE OVERALL SPECIFICATION AND DESIGN INTENT

KEY PLAN

Issued Drawing Log

No.	Date	Item
1	11/14/16	60% DESIGN DRAWINGS
#	12/04/16	60% DD AFTER JOBWALK
#	12/30/16	85% CD DRAWINGS
#	01/27/17	100% CD DRAWINGS
#		
#		
#		

STAMP

DRAWING TITLE

GARDEN GROVE
EXISTING CAMERA DEMOLITION
OPERATIONS BUILDING

DRAWN BY: REDS	PROJECT NO.
CHECKED: REDS	SCALE: N.T.S.
APPROVED: REDS	CAD FILE

SC.205

LOCATION OF EXISTING CAMERAS, SWITCHES AND VARIOUS ACCESSORIES TO BE REMOVED AND RETURNED TO OCTA REPRESENTATIVE.

BRAKE CHECK BUILDING

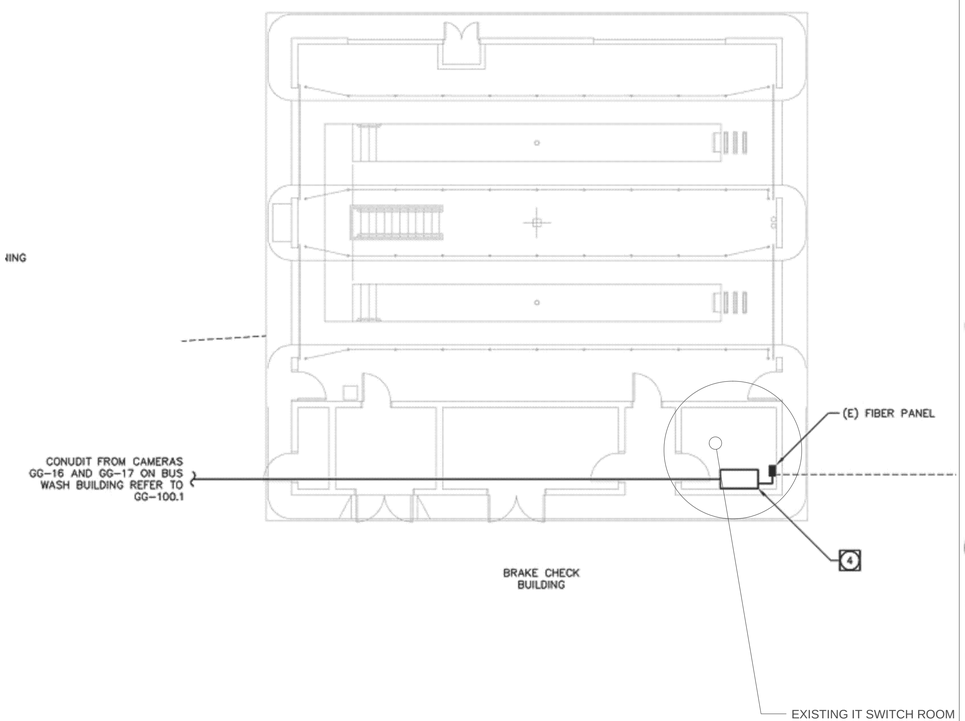

FUELING

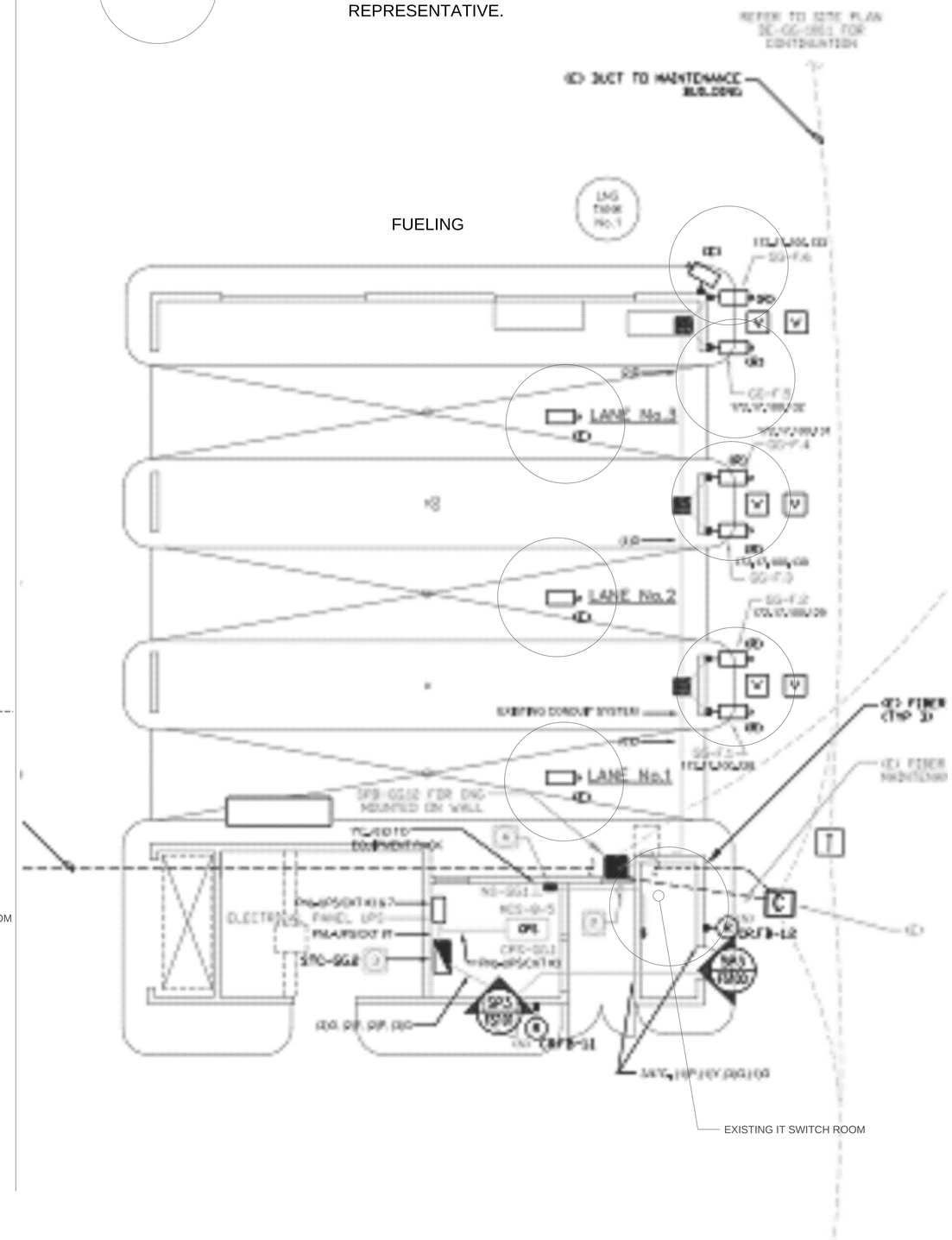

PROJECT

Orange County Transportation Authority

GARDEN GROVE BUS MAINTENANCE FACILITY

CONSULTANT

ALL DETAIL DRAWINGS AND DESIGN ELEMENTS ON THESE SHEETS ARE A BASIS OF DESIGN ONLY AND ARE A GENERAL REPRESENTATION OF THE QUALITY AND TYPE OF EQUIPMENT, INSTALLATION, AND WORKMANSHIP OF THE FINAL PRODUCT REQUIRED FOR THIS PROJECT. INSTALLATION CONTRACTOR IS ULTIMATELY RESPONSIBLE TO PROVIDE EQUIPMENT THAT IS MATCHING AND FUNCTIONAL IN DESIGN, AND A FINAL PRODUCT THAT MEETS THE OVERALL SPECIFICATION AND DESIGN INTENT

KEY PLAN

Issued Drawing Log

No.	Date	Item
1	11/14/16	60% DESIGN DRAWINGS
#	12/04/16	60% DD AFTER JOBWALK
#	12/30/16	85% CD DRAWINGS
#	01/27/17	100% CD DRAWINGS
#		
#		
#		

STAMP

DRAWING TITLE

GARDEN GROVE
EXISTING CAMERA DEMOLITION
FUELING & BRAKE CHECK

DRAWN BY: RED5	PROJECT NO.
CHECKED: RED5	SCALE: N.T.S.
APPROVED: RED5	CAD FILE

SC.206

LOCATION OF EXISTING CAMERAS, SWITCHES AND VARIOUS ACCESSORIES TO BE REMOVED AND RETURNED TO OCTA REPRESENTATIVE.

ANNEX 1ST FLOOR

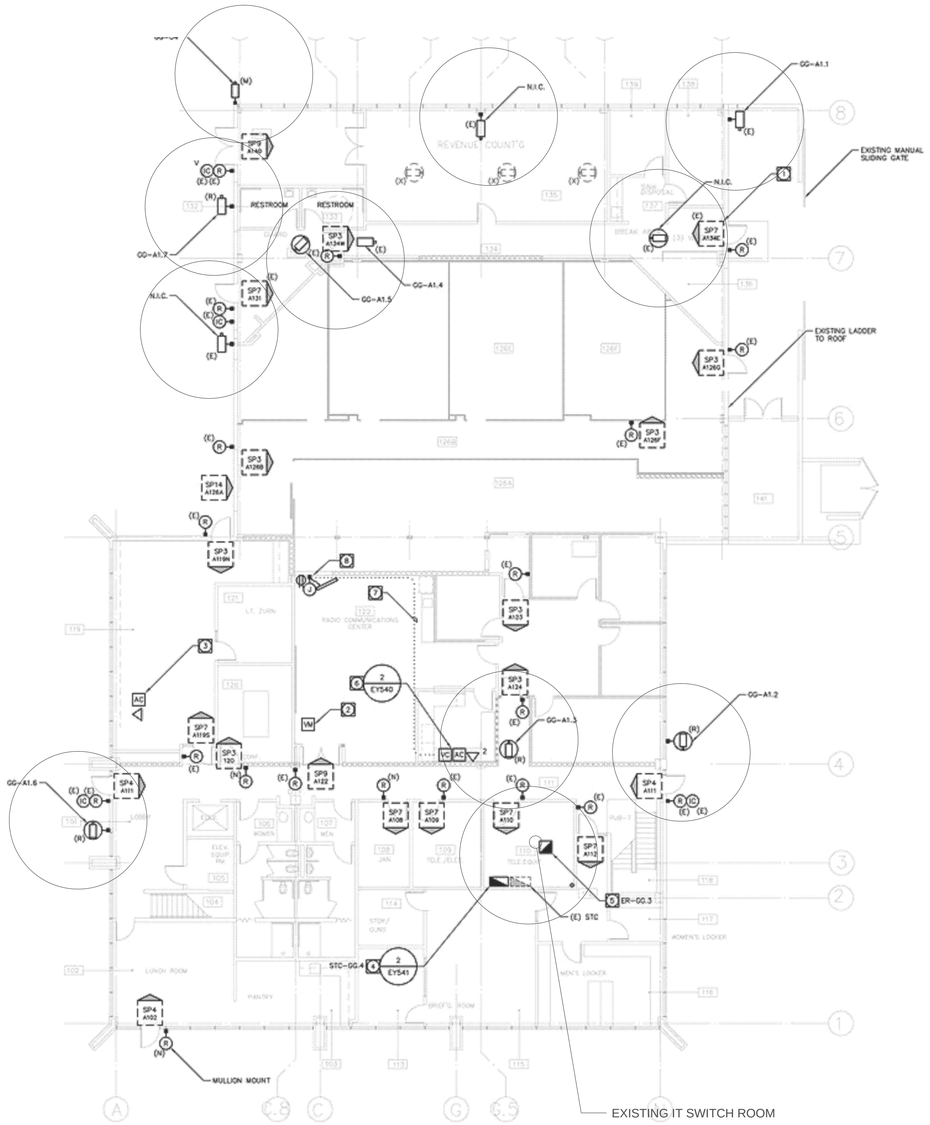

ANNEX 2ND FLOOR

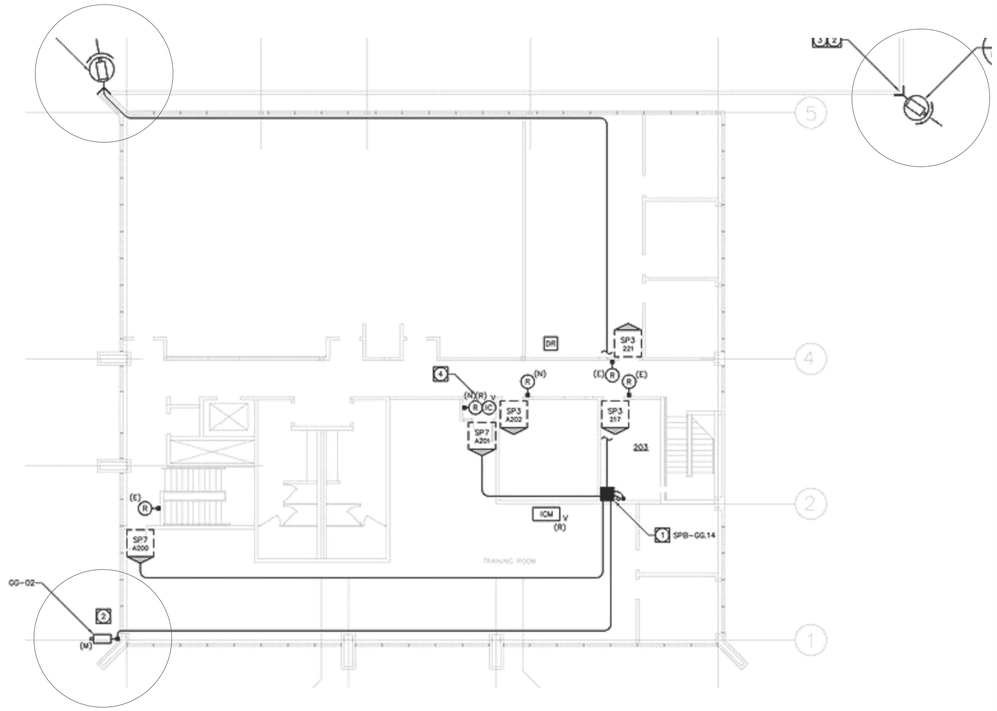

PROJECT

Orange County Transportation Authority

GARDEN GROVE BUS MAINTENANCE FACILITY

CONSULTANT

ALL DETAIL DRAWINGS AND DESIGN ELEMENTS ON THESE SHEETS ARE A BASIS OF DESIGN ONLY AND ARE A GENERAL REPRESENTATION OF THE QUALITY AND TYPE OF EQUIPMENT, INSTALLATION, AND WORKMANSHIP OF THE FINAL PRODUCT REQUIRED FOR THIS PROJECT. INSTALLATION CONTRACTOR IS ULTIMATELY RESPONSIBLE TO PROVIDE EQUIPMENT THAT IS MATCHING AND FUNCTIONAL IN DESIGN, AND A FINAL PRODUCT THAT MEETS THE OVERALL SPECIFICATION AND DESIGN INTENT

KEY PLAN

Issued Drawing Log

No.	Date	Item
1	11/14/16	60% DESIGN DRAWINGS
#	12/04/16	60% DD AFTER JOBWALK
#	12/30/16	85% CD DRAWINGS
#	01/27/17	100% CD DRAWINGS
#		
#		
#		

STAMP

DRAWING TITLE

GARDEN GROVE
EXISTING CAMERA DEMOLITION
ANNEX 1ST & 2ND FLOOR

DRAWN BY: REDS	PROJECT NO.
CHECKED: REDS	SCALE: N.T.S.
APPROVED: REDS	CAD FILE

SC.207

TYPE I AND TYPE II - DOME CAMERA MOUNTING METHODS

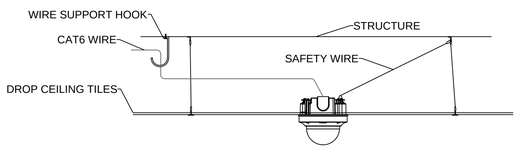

1 TYPICAL DOME - DROP CEILING MOUNT

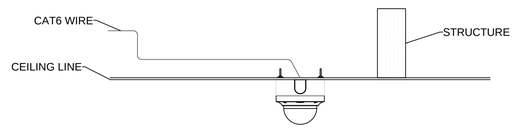

2 TYPICAL DOME - HARD CEILING MOUNT ACCESSIBLE

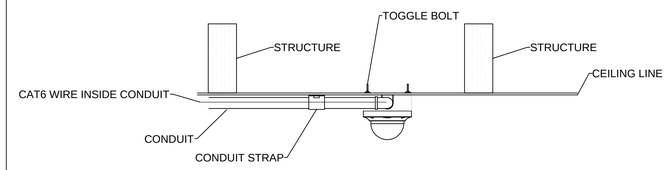

3 TYPICAL DOME - HARD CEILING MOUNT INACCESSIBLE

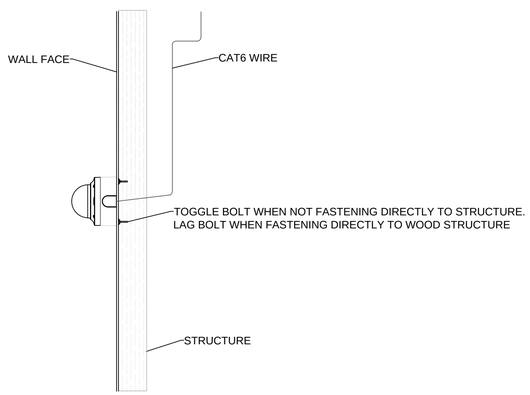

4 TYPICAL DOME - WALL MOUNT ACCESSIBLE

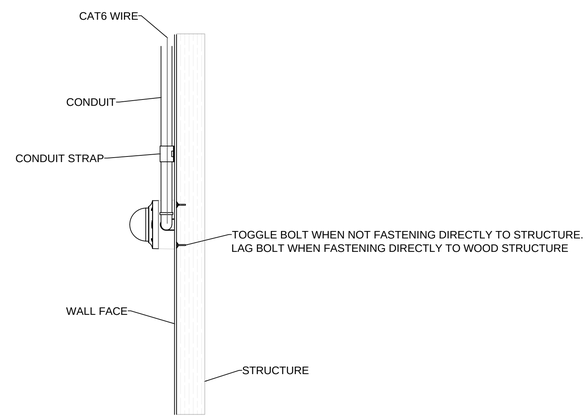

5 TYPICAL DOME - WALL MOUNT INACCESSIBLE

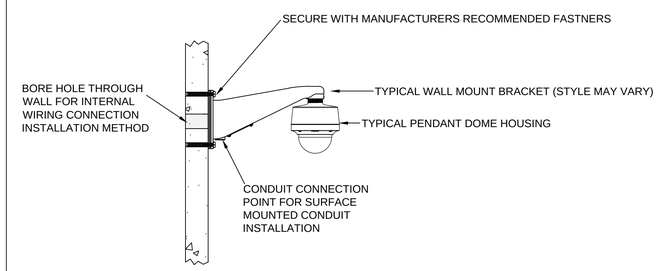

6 TYPICAL MOUNTING METHOD - PENDANT DOME ON WALL MOUNT

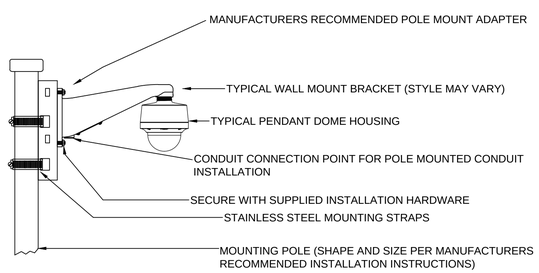

7 TYPICAL MOUNTING METHOD - PENDANT DOME ON POLE MOUNT

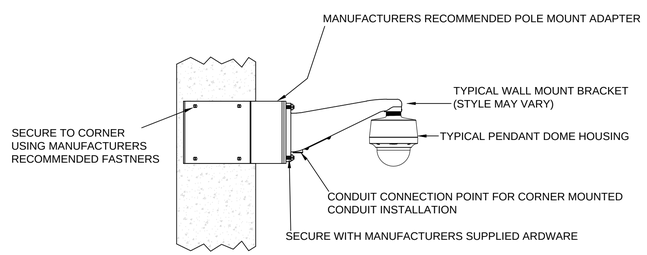

8 TYPICAL CORNER MOUNT METHOD - PENDANT DOME ON CORNER ADAPTER

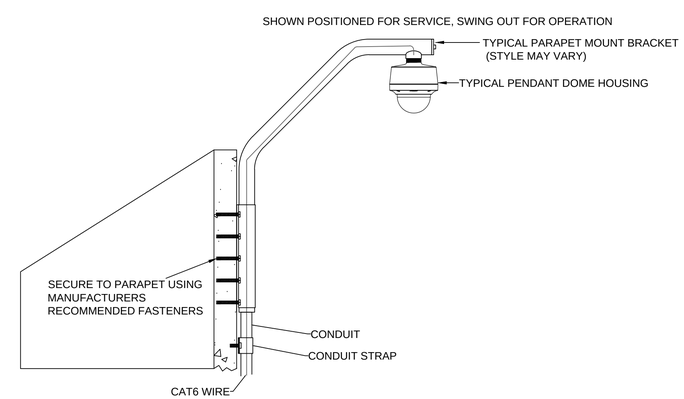

9 TYPICAL PARAPET MOUNT METHOD - PENDANT DOME ON PARAPET ADAPTER

PROJECT

Orange County Transportation Authority
OCTA

GARDEN GROVE BUS
MAINTENANCE FACILITY

REDFIVE SECURITY

CONSULTANT

ALL DETAIL DRAWINGS AND DESIGN ELEMENTS ON THESE SHEETS ARE A BASIS OF DESIGN ONLY AND ARE A GENERAL REPRESENTATION OF THE QUALITY AND TYPE OF EQUIPMENT, INSTALLATION, AND WORKMANSHIP OF THE FINAL PRODUCT REQUIRED FOR THIS PROJECT. INSTALLATION CONTRACTOR IS ULTIMATELY RESPONSIBLE TO PROVIDE EQUIPMENT THAT IS MATCHING AND FUNCTIONAL IN DESIGN, AND A FINAL PRODUCT THAT MEETS THE OVERALL SPECIFICATION AND DESIGN INTENT

KEY PLAN

Issued Drawing Log

No.	Date	Item
1	11/14/16	60% DESIGN DRAWINGS
#	12/04/16	60% DD AFTER JOBWALK
#	12/30/16	85% CD DRAWINGS
#	01/27/17	100% CD DRAWINGS
#		
#		
#		

STAMP

DRAWING TITLE

GARDEN GROVE
DOME CAMERA DETAILS

DRAWN BY RED5	PROJECT NO.
CHECKED RED5	SCALE N.T.S.
APPROVED RED5	CAD FILE

SC.501

TYPE V - LPR TYPE CAMERA MOUNTING METHODS

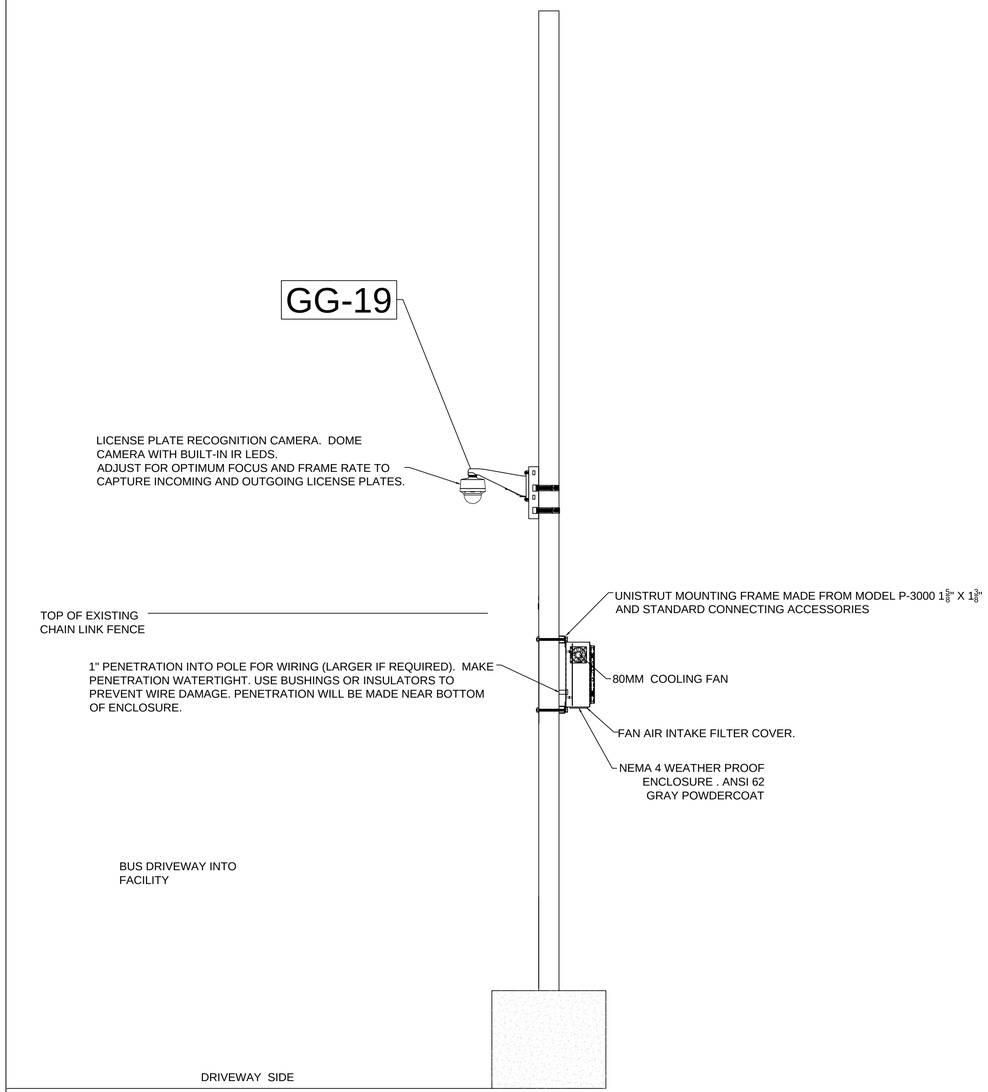

1 MOUNTING - LPR CAMERA AT BUS ENTRANCE

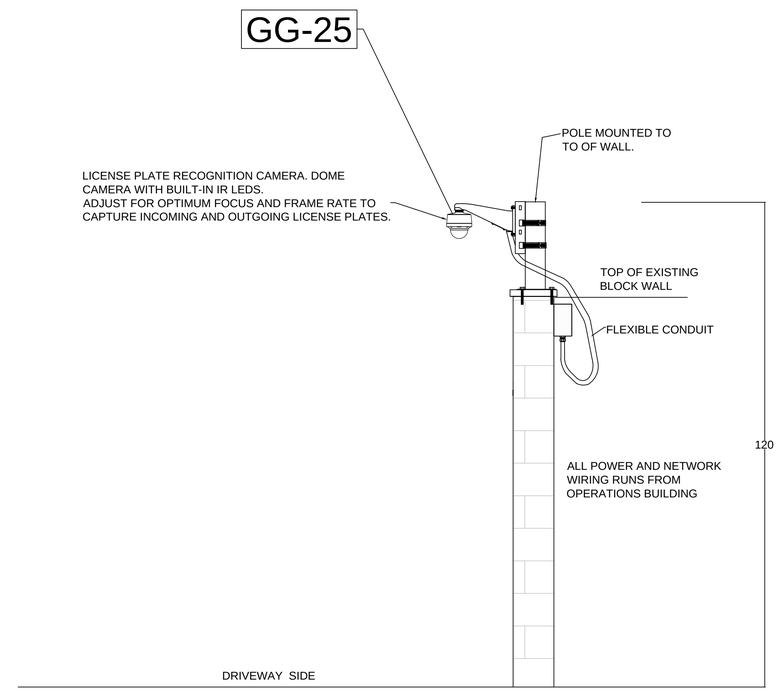

2 MOUNTING - LPR CAMERA MOUNTING AT MAIN ENTRY

PROJECT

Orange County Transportation Authority

GARDEN GROVE BUS MAINTENANCE FACILITY

REDFIVE SECURITY

CONSULTANT

ALL DETAIL DRAWINGS AND DESIGN ELEMENTS ON THESE SHEETS ARE A BASIS OF DESIGN ONLY AND ARE A GENERAL REPRESENTATION OF THE QUALITY AND TYPE OF EQUIPMENT, INSTALLATION, AND WORKMANSHIP OF THE FINAL PRODUCT REQUIRED FOR THIS PROJECT. INSTALLATION CONTRACTOR IS ULTIMATELY RESPONSIBLE TO PROVIDE EQUIPMENT THAT IS MATCHING AND FUNCTIONAL IN DESIGN, AND A FINAL PRODUCT THAT MEETS THE OVERALL SPECIFICATION AND DESIGN INTENT

KEY PLAN

Issued Drawing Log

No.	Date	Item
1	11/14/16	60% DESIGN DRAWINGS
#	12/04/16	60% DD AFTER JOBWALK
#	12/30/16	85% CD DRAWINGS
#	01/27/17	100% CD DRAWINGS
#		
#		
#		

STAMP

DRAWING TITLE

GARDEN GROVE
FIELD DETAILS
LPR CAMERAS

DRAWN BY REDS	PROJECT NO.
CHECKED REDS	SCALE N.T.S.
APPROVED REDS	CAD FILE

SC.502

TYPE III - PTZ DOME CAMERA MOUNTING METHODS

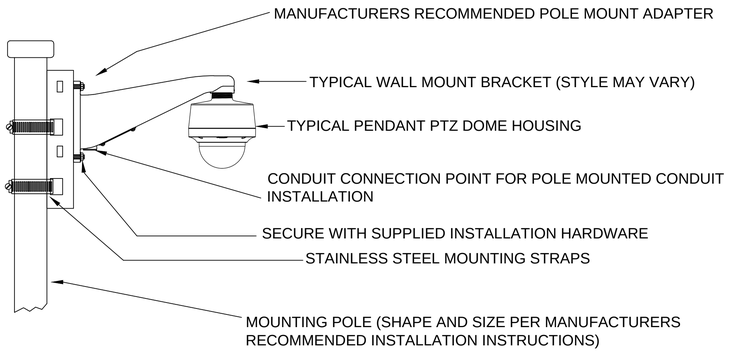

1 TYPICAL MOUNTING METHOD - PENDANT PTZ DOME ON POLE MOUNT

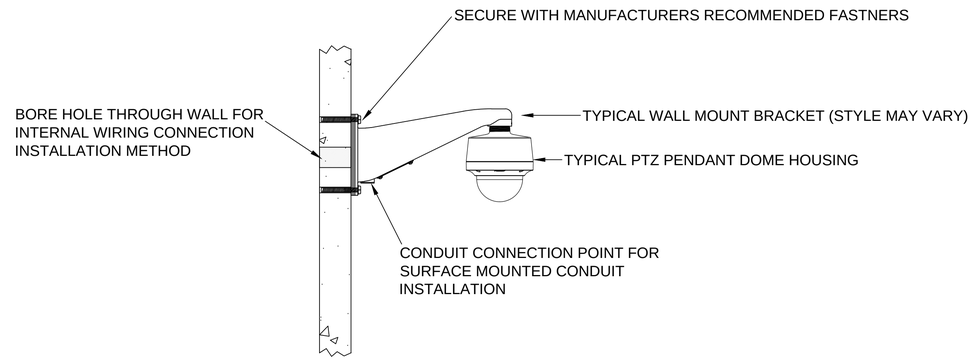

2 TYPICAL MOUNTING METHOD - PENDANT PTZ DOME ON WALL MOUNT

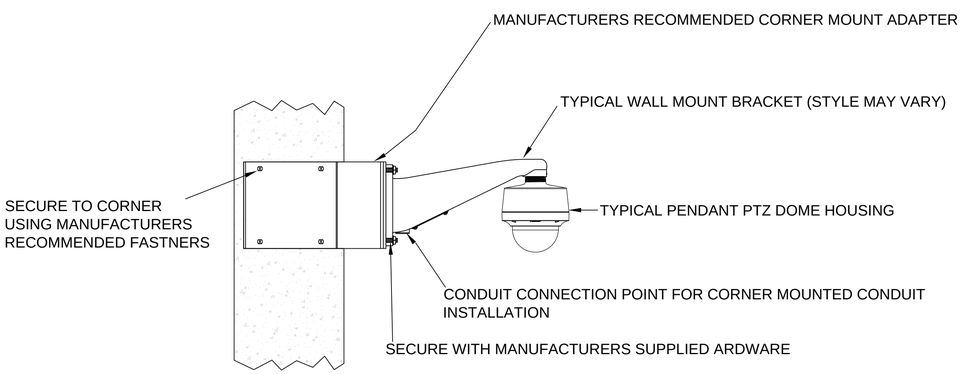

3 TYPICAL CORNER MOUNT METHOD - PENDANT PTZ DOME ON CORNER ADAPTER

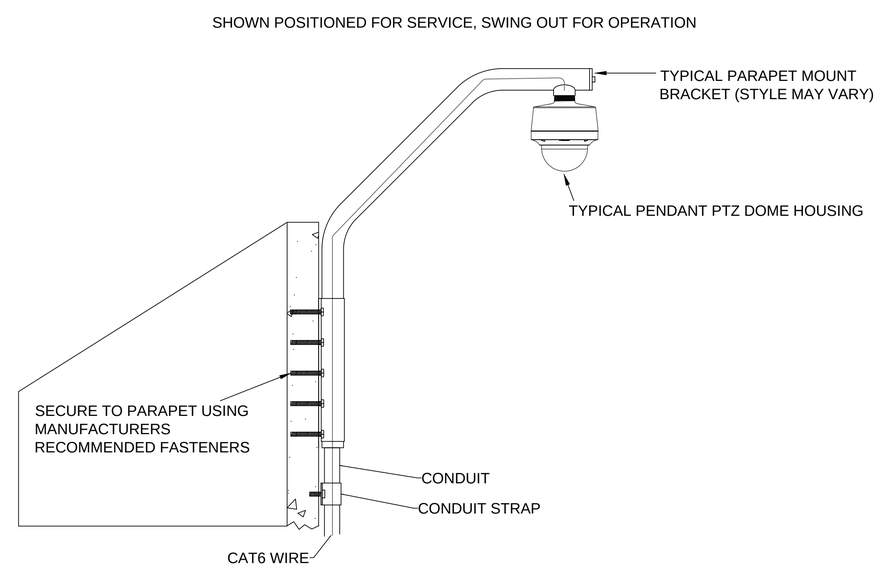

4 TYPICAL PARAPET MOUNT METHOD - PENDANT PTZ DOME ON PARAPET ADAPTER

PROJECT

Orange County Transportation Authority
OCTA

GARDEN GROVE BUS MAINTENANCE FACILITY

REDFIVE SECURITY

CONSULTANT

ALL DETAIL DRAWINGS AND DESIGN ELEMENTS ON THESE SHEETS ARE A BASIS OF DESIGN ONLY AND ARE A GENERAL REPRESENTATION OF THE QUALITY AND TYPE OF EQUIPMENT, INSTALLATION, AND WORKMANSHIP OF THE FINAL PRODUCT REQUIRED FOR THIS PROJECT. INSTALLATION CONTRACTOR IS ULTIMATELY RESPONSIBLE TO PROVIDE EQUIPMENT THAT IS MATCHING AND FUNCTIONAL IN DESIGN, AND A FINAL PRODUCT THAT MEETS THE OVERALL SPECIFICATION AND DESIGN INTENT

KEY PLAN

Issued Drawing Log

No.	Date	Item
1	11/14/16	60% DESIGN DRAWINGS
#	12/04/16	60% DD AFTER JOBWALK
#	12/30/16	85% CD DRAWINGS
#	01/27/17	100% CD DRAWINGS
#		
#		
#		

STAMP

DRAWING TITLE

GARDEN GROVE PTZ CAMERA DETAILS

DRAWN BY REDS	PROJECT NO.
CHECKED REDS	SCALE N.T.S.
APPROVED REDS	CAD FILE

SC.503

TYPE VI - BULLET OR HOUSING TYPE CAMERA MOUNTING METHODS

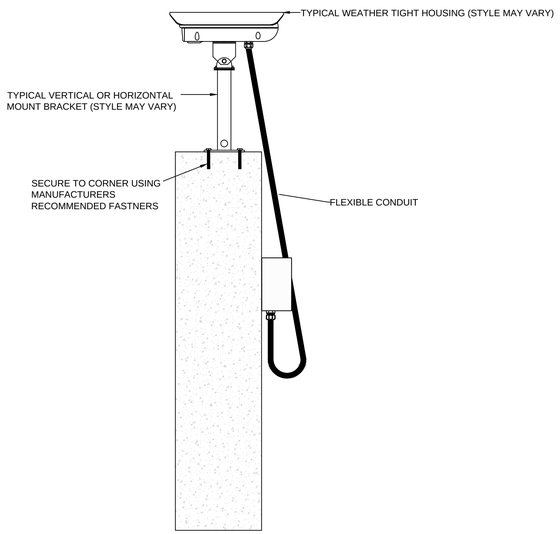

1 TYPICAL MOUNTING - CAMERA INSIDE HOUSING VERTICAL TYPE MOUNT

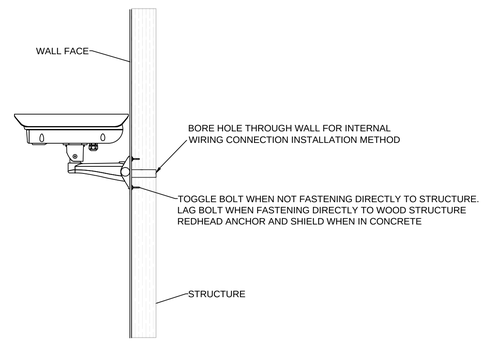

2 TYPICAL MOUNTING - CAMERA HOUSING WALL TYPE MOUNT ACCESSIBLE

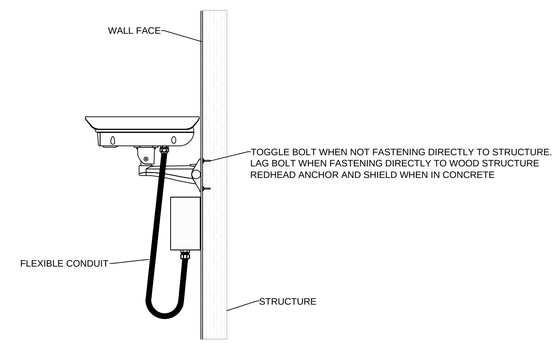

3 TYPICAL MOUNTING - CAMERA HOUSING WALL TYPE MOUNT INACCESSIBLE

PROJECT

Orange County Transportation Authority
OCTA

GARDEN GROVE BUS MAINTENANCE FACILITY

REDFIVE SECURITY

CONSULTANT

ALL DETAIL DRAWINGS AND DESIGN ELEMENTS ON THESE SHEETS ARE A BASIS OF DESIGN ONLY AND ARE A GENERAL REPRESENTATION OF THE QUALITY AND TYPE OF EQUIPMENT, INSTALLATION, AND WORKMANSHIP OF THE FINAL PRODUCT REQUIRED FOR THIS PROJECT. INSTALLATION CONTRACTOR IS ULTIMATELY RESPONSIBLE TO PROVIDE EQUIPMENT THAT IS MATCHING AND FUNCTIONAL IN DESIGN, AND A FINAL PRODUCT THAT MEETS THE OVERALL SPECIFICATION AND DESIGN INTENT

KEY PLAN

Issued Drawing Log

No.	Date	Item
1	11/14/16	60% DESIGN DRAWINGS
#	12/04/16	60% DD AFTER JOBWALK
#	12/30/16	85% CD DRAWINGS
#	01/27/17	100% CD DRAWINGS
#		
#		
#		

STAMP

DRAWING TITLE

GARDEN GROVE HOUSING CAMERA DETAILS

DRAWN BY REDS	PROJECT NO.
CHECKED REDS	SCALE N.T.S.
APPROVED REDS	CAD FILE

SC.504

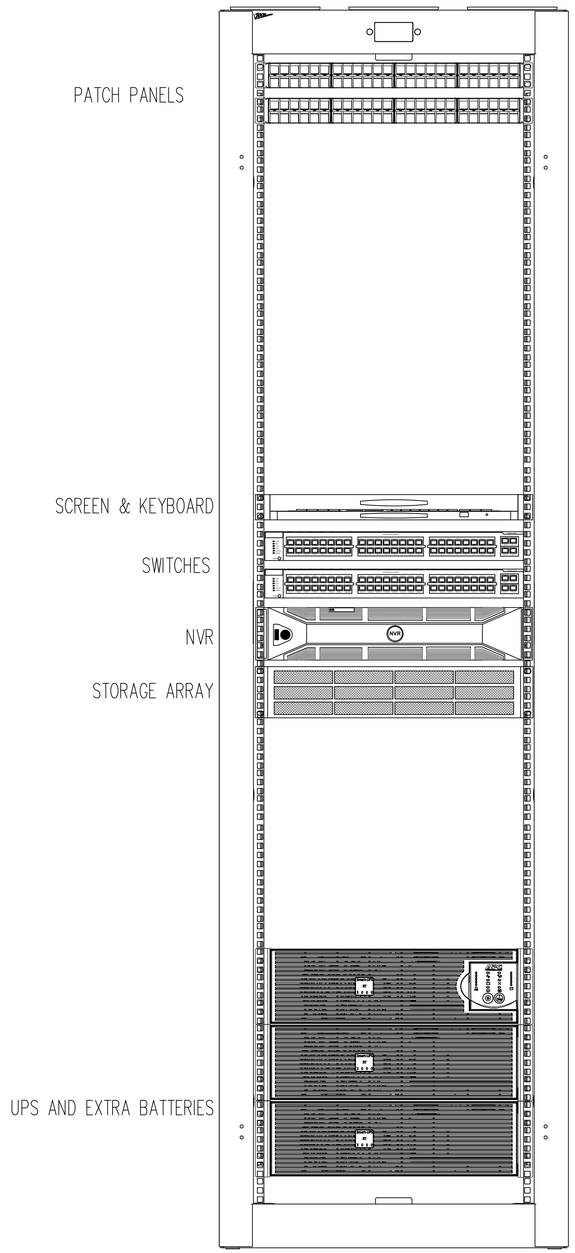

TYPICAL
EQUIPMENT RACK
LAYOUT
FRONT VIEW

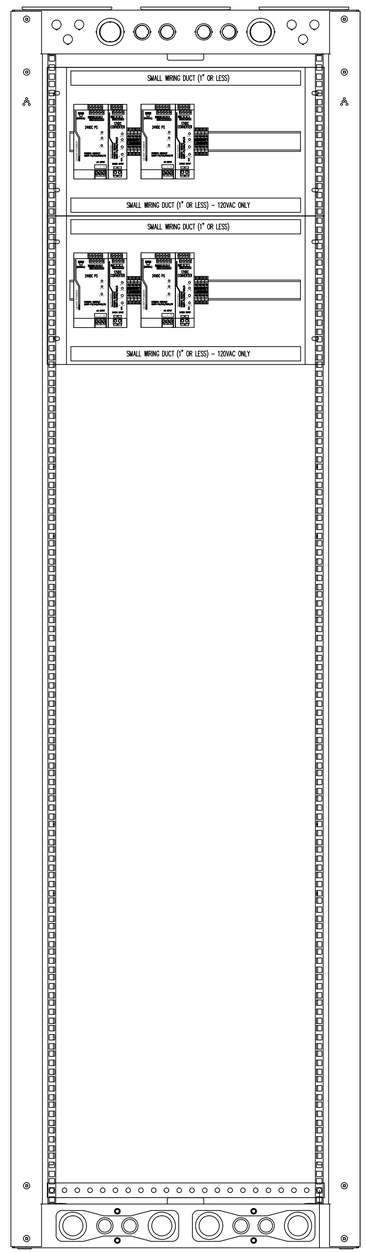

DIN RAIL MOUNTED
POWER SUPPLIES
FOR ACCESSORIES

ACTUAL EQUIPMENT PER SPECIFICATIONS
DRAWING FOR LAYOUT REFERENCE ONLY

TYPICAL
EQUIPMENT RACK
LAYOUT
REAR VIEW

PROJECT

Orange County Transportation Authority
OCTA

GARDEN GROVE BUS
MAINTENANCE FACILITY

REDFIVE SECURITY

CONSULTANT

ALL DETAIL DRAWINGS AND DESIGN ELEMENTS ON THESE SHEETS ARE A BASIS OF DESIGN ONLY AND ARE A GENERAL REPRESENTATION OF THE QUALITY AND TYPE OF EQUIPMENT, INSTALLATION, AND WORKMANSHIP OF THE FINAL PRODUCT REQUIRED FOR THIS PROJECT. INSTALLATION CONTRACTOR IS ULTIMATELY RESPONSIBLE TO PROVIDE EQUIPMENT THAT IS MATCHING AND FUNCTIONAL IN DESIGN, AND A FINAL PRODUCT THAT MEETS THE OVERALL SPECIFICATION AND DESIGN INTENT

KEY PLAN

Issued Drawing Log

No.	Date	Item
1	11/14/16	60% DESIGN DRAWINGS
#	12/04/16	60% DD AFTER JOBWALK
#	12/30/16	85% CD DRAWINGS
#	01/27/17	100% CD DRAWINGS
#		
#		
#		

STAMP

DRAWING TITLE

GARDEN GROVE
TYPICAL RACK
EQUIPMENT DETAILS

DRAWN BY REDS	PROJECT NO.
CHECKED REDS	SCALE N.T.S.
APPROVED REDS	CAD FILE

SC.505

TYPE 1 EXISTING 110 VAC POWER TO LOCATION

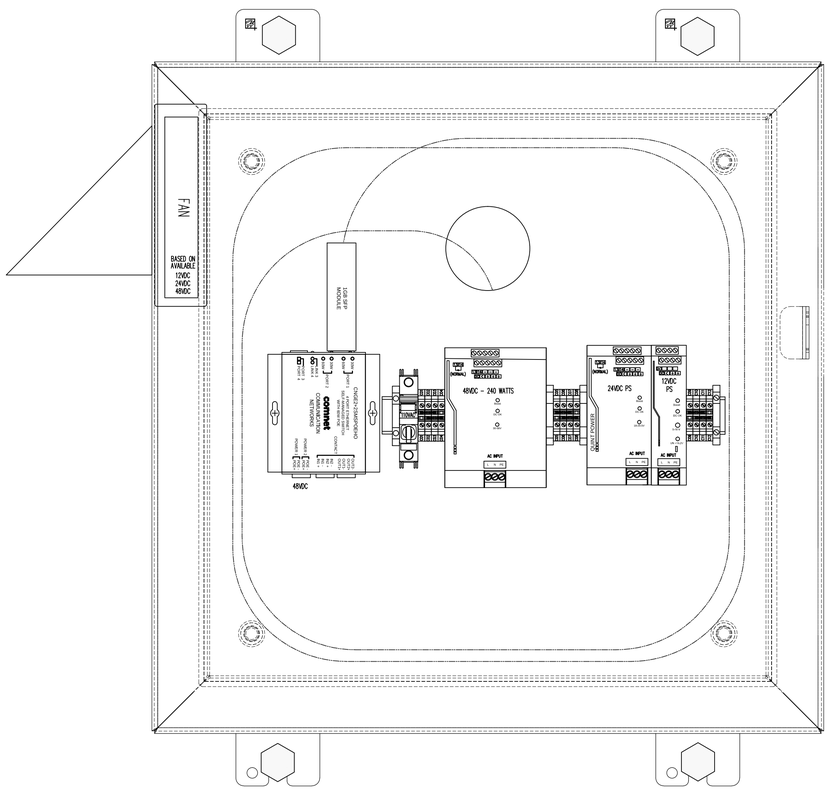

BASIS OF DESIGN - FOR REFERENCE ONLY.
CONTRACTORS ACTUAL INSTALLATION MAY VARY BASED ON ACTUAL CAMERA AND INFRASTRUCTURE PRODUCTS USED IN BID.

1.) FIBER TO COPPER MEDIA CONVERTER COMNET CNGE2+2SMSPOEHO
2.) COMNET FIBER SFP MODULE 1GB - MATCH TO FIBER TYPE
3.) FOR LOCATIONS WITH EXISTING 110VAC POWER AT ENCLOSURE LOCATIONS USE DIN RAIL MOUNTED 48,24, AND/OR12VDC POWER SUPPLY(S) AS NEEDED -- FOR LOCATIONS WITHOUT 110VAC INSTALL NEW 48VDC 10A POWER SUPPLY AT HEAD END AND USE EXISTING WIRE TO ENCLOSURE LOCATIONS, INSTALL DIN RAIL MOUNTED 48 TO 24VDC STEP DOWN AND/OR 24 TO 12 VDC STEP DOWN POWER SUPPLY AS NEEDED
4.) OM-3 FIBER
5.) CAT6 23AWG SOLID COPPER WIRE
6.) 80MM FAN (VOLTAGE BASED ON AVAILABLE POWER)
7.) DIN RAIL MOUNTED TERMINAL STRIP
8.) DIN RAIL MOUNTED FUSE
9.) NEMA 4 ENCLOSURE WITH POWDER COATED ANSI 61 GRAY FINISH, SIZED TO FIT ALL EQUIPMENT AND PROVIDE SPACE FOR FUTURE EXPANSION AND ROOM TO ALLOW MAINTENANCE AND REPAIR.
10.) ENCLOSURE MAY HAVE ADDITIONAL EQUIPMENT FOR LIGHTING AND/OR PHOTOCELL USED WITH CCTV SYSTEM.

NOTES:

1.) WHERE EXISTING ENCLOSURES ARE PRESENT THERE IS EITHER A 110VAC OUTLET INSIDE ENCLOSURE OR THERE IS HEAVY GAUGE WIRE WITH DC POWER SUPPLIED FROM HEAD END. INSTALLATION CONTRACTOR TO DETERMINE PROPER POWER SUPPLY DEVICES AND TRANSFORMERS TO FIT EXISTING FIELD CONDITIONS.
2.) FIBER CABLE BEND RADIUS PER MANUFACTURERS SPECIFICATION
3.) FIBER CABLE TO HAVE 2 SERVICE LOOPS AS SHOWN
4.) FIBER SFP MODULE TO BE COMPATIBLE WITH SFP MODULES AT INCOMING SWITCH
5.) DIN RAIL MOUNTED DEVICE TO BE PLUMB AND LEVEL
6.) POWER SUPPLIES AND/OR CONVERTERS TO BE INDUSTRIAL GRADE TEMPERATURE AND MOISTURE RESISTANT
7.) INCOMING 110VAC HIGH VOLTAGE LINES TO BE CLEARLY MACHINE LABELED WITH PERMANENT HEAT SHRINK LABELS
8.) POWER SUPPLIES AND CONVERTERS SUPPLIED ONLY NEED TO MATCH NEW EQUIPMENT INSTALLED, ALL VOLTAGES MAY NOT BE REQUIRED
9.) 48VDC TO 48VDC POWER CONVERTER INTENDED TO COMPENSATE FOR VOLTAGE DROP DUE TO WIRE LENGTH WHERE 48VDC POWER COMES FROM HEAD END.

TYPE 2 NEW DC TO LOCATION ON EXISTING COPPER WIRING

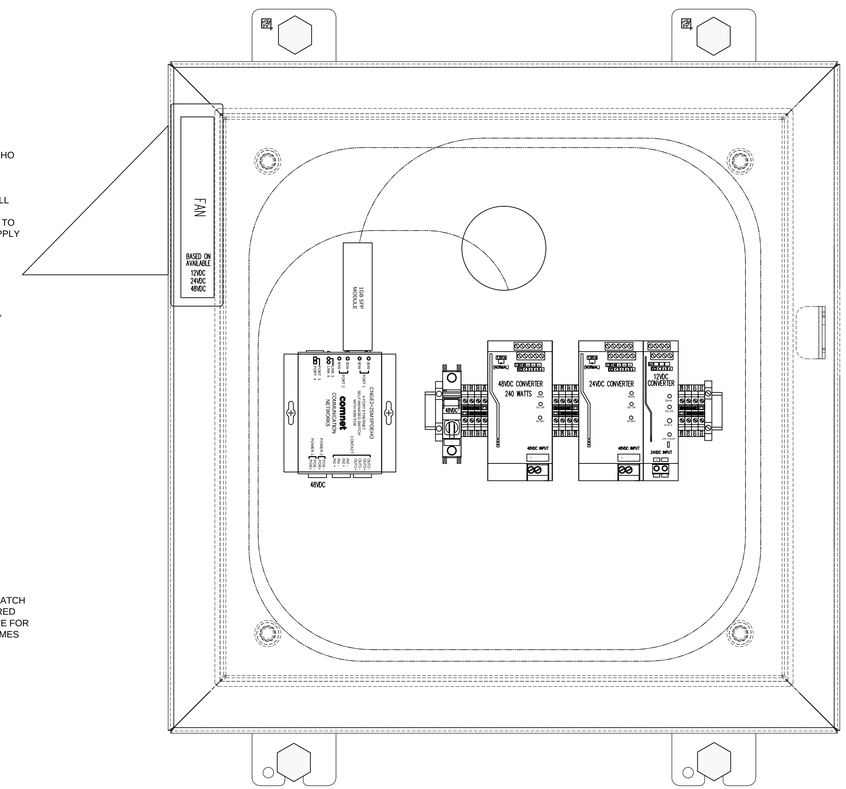

ENCLOSURE TYPE 1 & TYPE 2

UP TO 2 CAMERAS, 2 PORT ETHERNET SWITCH WITH 30 WATT PER PORT POE+ POWER SUPPLY

PROJECT

Orange County Transportation Authority
OCTA

GARDEN GROVE BUS MAINTENANCE FACILITY

RED FIVE SECURITY

CONSULTANT

ALL DETAIL DRAWINGS AND DESIGN ELEMENTS ON THESE SHEETS ARE A BASIS OF DESIGN ONLY AND ARE A GENERAL REPRESENTATION OF THE QUALITY AND TYPE OF EQUIPMENT, INSTALLATION, AND WORKMANSHIP OF THE FINAL PRODUCT REQUIRED FOR THIS PROJECT. INSTALLATION CONTRACTOR IS ULTIMATELY RESPONSIBLE TO PROVIDE EQUIPMENT THAT IS MATCHING AND FUNCTIONAL IN DESIGN, AND A FINAL PRODUCT THAT MEETS THE OVERALL SPECIFICATION AND DESIGN INTENT

KEY PLAN

Issued Drawing Log

1	11/14/16	60% DESIGN DRAWINGS
#	12/04/16	60% DD AFTER JOBWALK
#	12/30/16	85% CD DRAWINGS
#	01/27/17	100% CD DRAWINGS
#		
#		
#		

No.	Date	Item

STAMP

DRAWING TITLE

GARDEN GROVE
TYPICAL ENCLOSURE
EQUIPMENT DETAILS

DRAWN BY: RED5	PROJECT NO.
CHECKED: RED5	SCALE: N.T.S.
APPROVED: RED5	CAD FILE

SC.506

REMOTE BUILDING EQUIPMENT ENCLOSURE TYPICAL LAYOUT

NOTES:
1.) FIBER CABLE BEND RADIUS PER MANUFACTURERS SPECIFICATION
2.) FIBER CABLE TO HAVE 24" SERVICE LOOP
3.) FIBER SFP MODULE TO BE COMPATIBLE WITH SFP MODULES AT INCOMING SWITCH
4.) DIN RAIL MOUNTED DEVICES TO BE PLUMB AND LEVEL
5.) POWER SUPPLIES AND/OR CONVERTERS TO BE INDUSTRIAL GRADE
6.) INCOMING 110VAC HIGH VOLTAGE LINES TO BE CLEARLY MACHINE LABELED WITH PERMANENT HEAT SHRINK LABELS
7.) DLBX ENCLOSURE CAN BE MOUNTED VERTICALLY AGAINST WALL OR HORIZONTALLY ON OPTIONAL WALL BRACKETS TO FIT AVAILABLE SPACE
8.) ALL DEVICES TO BE MOUNTED ON MANUFACTURERS DESIGNED RACK RAIL MOUNT, SECURED INSIDE A DRAWER, OR PROPERLY MOUNTED ON A BACKPLANE. DEVICES MUST BE SECURED WITH FASTENERS, NO TAPE OR ADHESIVE ALLOWED.

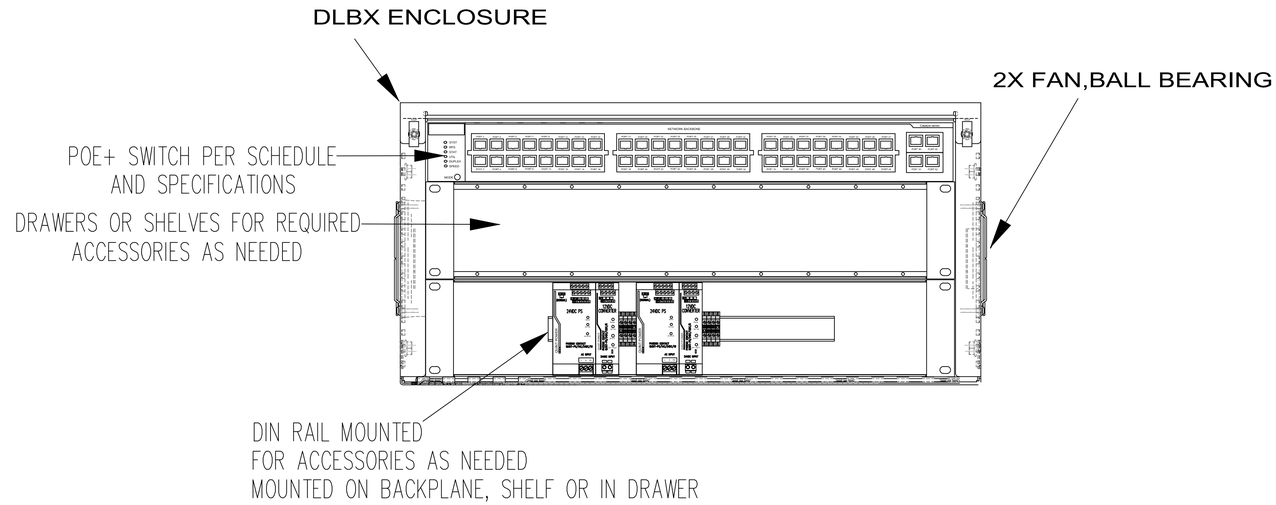

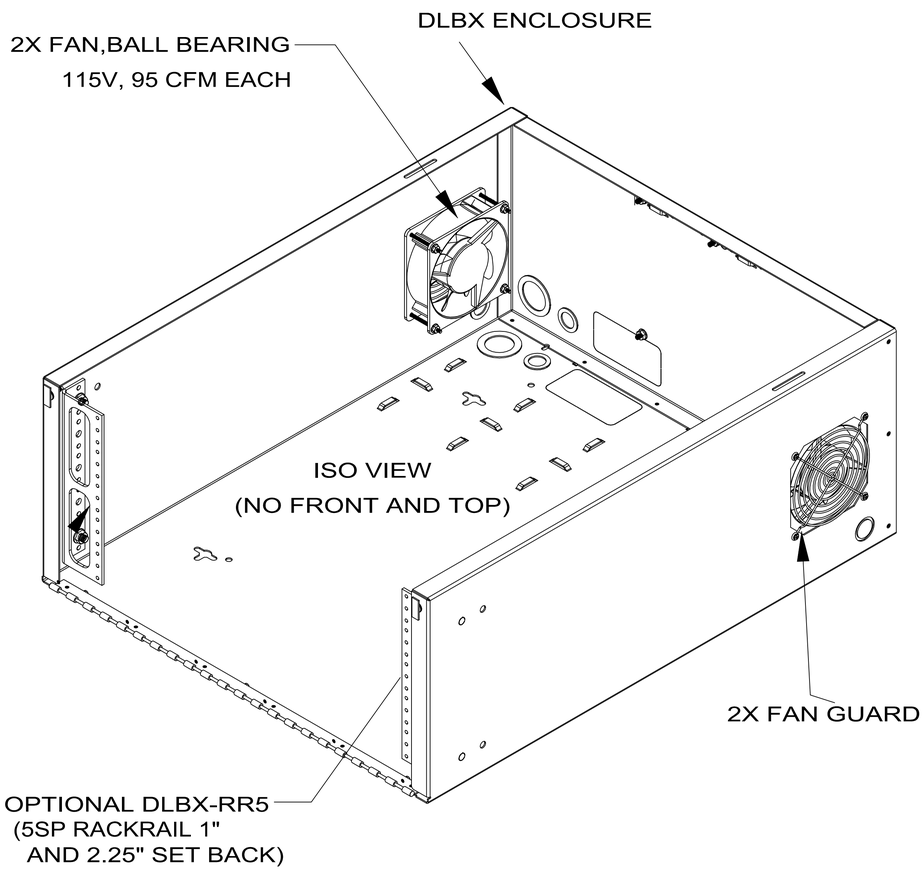

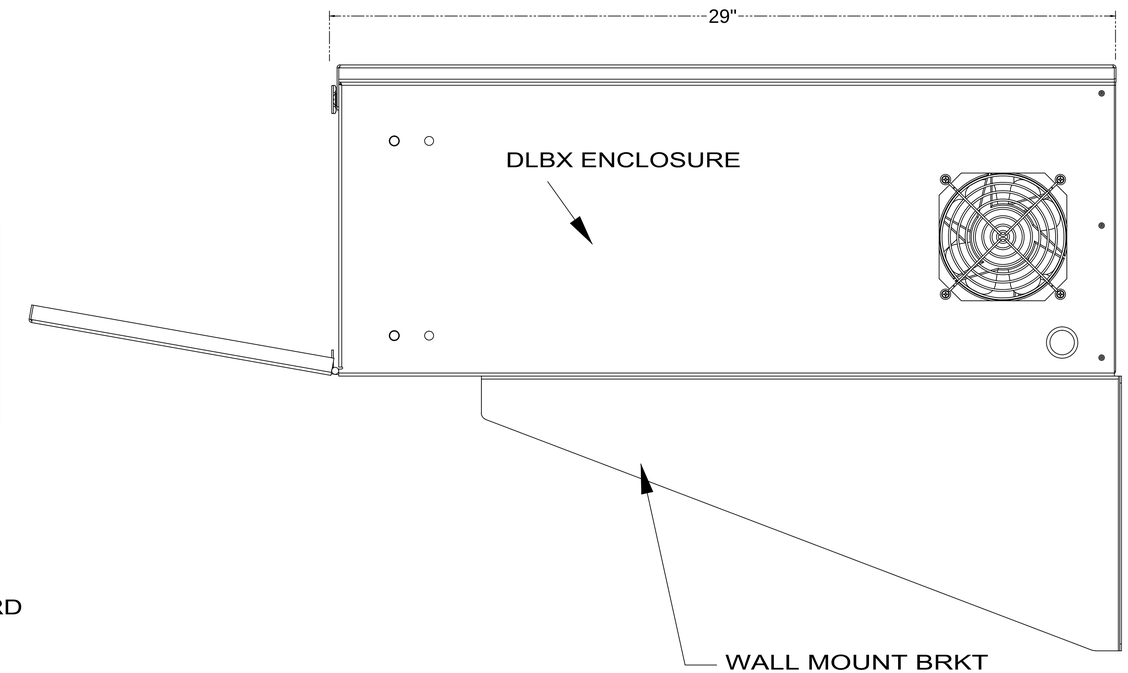

PROJECT

Orange County Transportation Authority
OCTA

GARDEN GROVE BUS MAINTENANCE FACILITY

REDFIVE SECURITY

CONSULTANT

ALL DETAIL DRAWINGS AND DESIGN ELEMENTS ON THESE SHEETS ARE A BASIS OF DESIGN ONLY AND ARE A GENERAL REPRESENTATION OF THE QUALITY AND TYPE OF EQUIPMENT, INSTALLATION, AND WORKMANSHIP OF THE FINAL PRODUCT REQUIRED FOR THIS PROJECT. INSTALLATION CONTRACTOR IS ULTIMATELY RESPONSIBLE TO PROVIDE EQUIPMENT THAT IS MATCHING AND FUNCTIONAL IN DESIGN, AND A FINAL PRODUCT THAT MEETS THE OVERALL SPECIFICATION AND DESIGN INTENT

KEY PLAN

Issued Drawing Log

No.	Date	Item
1	11/14/16	60% DESIGN DRAWINGS
#	12/04/16	60% DD AFTER JOBWALK
#	12/30/16	85% CD DRAWINGS
#	01/27/17	100% CD DRAWINGS
#		
#		
#		

STAMP

DRAWING TITLE

GARDEN GROVE
REMOTE BUILDING ENCLOSURE
EQUIPMENT DETAILS

DRAWN BY RED5	PROJECT NO.
CHECKED RED5	SCALE N.T.S.
APPROVED RED5	CAD FILE

SC.507

BASIC SYSTEM LINE DIAGRAM

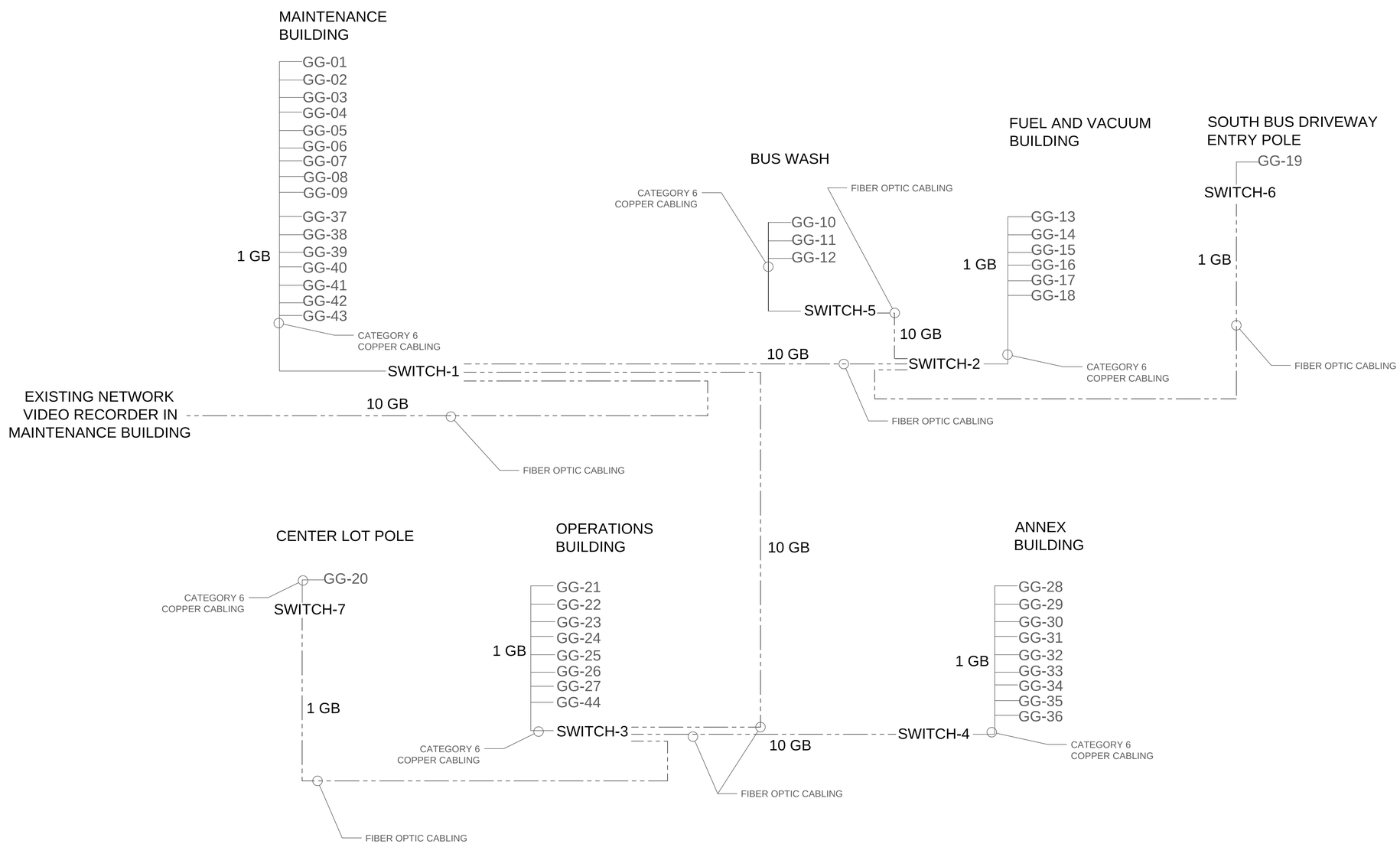

PROJECT

Orange County Transportation Authority

GARDEN GROVE BUS MAINTENANCE FACILITY

RED FIVE SECURITY

CONSULTANT

ALL DETAIL DRAWINGS AND DESIGN ELEMENTS ON THESE SHEETS ARE A BASIS OF DESIGN ONLY AND ARE A GENERAL REPRESENTATION OF THE QUALITY AND TYPE OF EQUIPMENT, INSTALLATION, AND WORKMANSHIP OF THE FINAL PRODUCT REQUIRED FOR THIS PROJECT. INSTALLATION CONTRACTOR IS ULTIMATELY RESPONSIBLE TO PROVIDE EQUIPMENT THAT IS MATCHING AND FUNCTIONAL IN DESIGN, AND A FINAL PRODUCT THAT MEETS THE OVERALL SPECIFICATION AND DESIGN INTENT

KEY PLAN

Issued Drawing Log

No.	Date	Item
1	11/14/16	60% DESIGN DRAWINGS
#	12/04/16	60% DD AFTER JOBWALK
#	12/30/16	85% CD DRAWINGS
#	01/27/17	100% CD DRAWINGS
#		
#		
#		

STAMP

DRAWING TITLE

GARDEN GROVE LINE DIAGRAM

DRAWN BY REDS	PROJECT NO.
CHECKED REDS	SCALE N.T.S.
APPROVED REDS	CAD FILE

SC.601